TRUST
Air Conditioners

INVERTER VRF SYSTEM

(V SERIES)

TRUST AIR CONDITIONING EQUIPMENT CO.
Prepared By: Engineering & R & D Department.

Shiraz- May 2017

Installation

1. Installation Introduction.....2
2. Units Installation.....14
3. Refrigerant Pipe Engineering 19
4. Drainage Pipe Engineering.....31
5. Duct Engineering.....35
6. Heat Insulation Engineering 37
7. Electrical Engineering..... 39
8. Commissioning and Trial Running 42

توجه:

شرکت تراست حق تغییر مشخصات دستگاه ها را در جهت بهبود و ارتقای کیفیت برای خود محفوظ می دارد.

2013-08

1. Installation Introduction

1.1 Select the refrigerant piping for V4+ S series modular type

1.1.1 Length and level difference permitted of the refrigerant piping

Table 1-1

Item			Permitted length	Pipe
Pipe length	Total pipe length(actual length)		≤1000m	L1+(L2+L3+…+L8+L9)×2 + a+b+c+…+i+j
	Farthest pipe length	Actual length	≤175m	$L_1+L_5+L_8+L_9+j$
		Equivalent length	≤200m	
	Equivalent length L of pipe from the first branch to the farthest one		≤40m/90m(*1)	$L_5+L_8+L_9+j$
Level difference	Level difference between indoor unit and outdoor unit	Outdoor unit up	≤ 70m	——
		Outdoor unit down	≤110m	
	Level difference between indoor unit and indoor unit		≤30m	

Fig 1-1

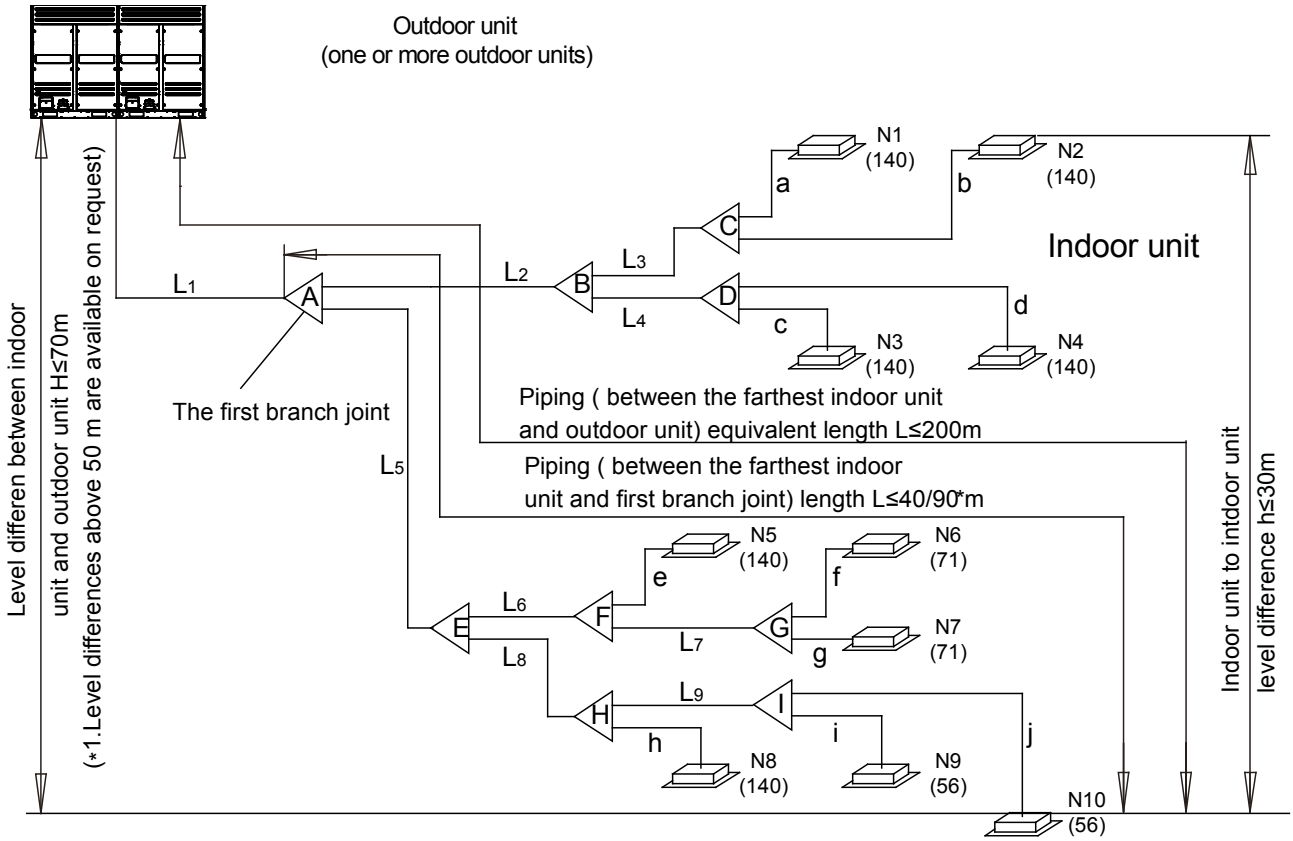

Note:

1. The equivalent length of the each branch joint is 0.5m. All branches must be purchased from Trust, otherwise system is induced to malfunction
2. The indoor units should as equal as possible to be installed in the both sides of the U-shape branch joint.
3. When the outdoor unit is on the top position and the difference of level is over 20m, it is recommended that set an oil return bend every 10m in the gas pipe of the main pipe, the specification of the oil return bend refers to the figure.

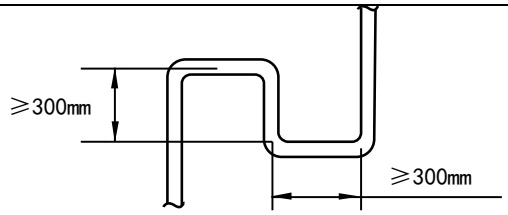

4. When the outdoor unit is on the low position, H≥40m, the liquid pipe of the main pipe need to increase one size.
5. The allowable length from the first branch joint to the farthest indoor unit should be equal to or shorter than 40m. But the allowable length can extended to 90m, if the selection principle can meets all the following conditions.

Condition	Example
1. It is needed to increase all the pipe diameters of the main distribution pipe which between the first and the last branch joint assembly. (Please change the pipe diameter at field) If the pipe diameter of the main slave pipe is the same as the main pipe, then it is not needed to be increased.	"N10": L5+L8+L9+j≤90m L2,L3,L4,L5,L6,L7,L8,L9 Need to increase the pipe diameter of the distribution pipe Increasing size as the following: Φ9.53→Φ12.7 Φ12.7→Φ15.9 Φ15.9→Φ19.1 Φ19.1→φ22.2 Φ22.2→φ25.4 Φ25.4→Φ28.6 Φ28.6→Φ31.8 Φ31.8→Φ38.1 Φ38.1→Φ41.3 Φ41.3→Φ44.5 Φ44.5→Φ54.0
2. When counting the total extended length, the actual length of above distribution pipes must be doubled. (Expect the main pipe and the distribution pipes which no need to be increased.) L1+(L2+L3+L4+L5+L6+L7+L8+L9)×2+a+b+c+d+e+f+g+h+i+j≤1000m	Refer to Figure.4-1
3. The length from the indoor unit to the nearest branch joint assembly ≤40m a,b,c,...j≤40m(Pipe diameter requirements, please refers to table.4-3)	Refer to Figure.4-1
4. The distance difference between [the outdoor unit to the farthest indoor unit] and [the outdoor unit to the nearest indoor unit] is ≤40m. The farthest indoor unit "N10" The nearest indoor unit "N1" (L1+L5+L8+L9+j)-(L1+L2+L3+a)≤40m	Refer to Figure.4-1

1.1.2 Select the refrigerant piping

Fig 1-2

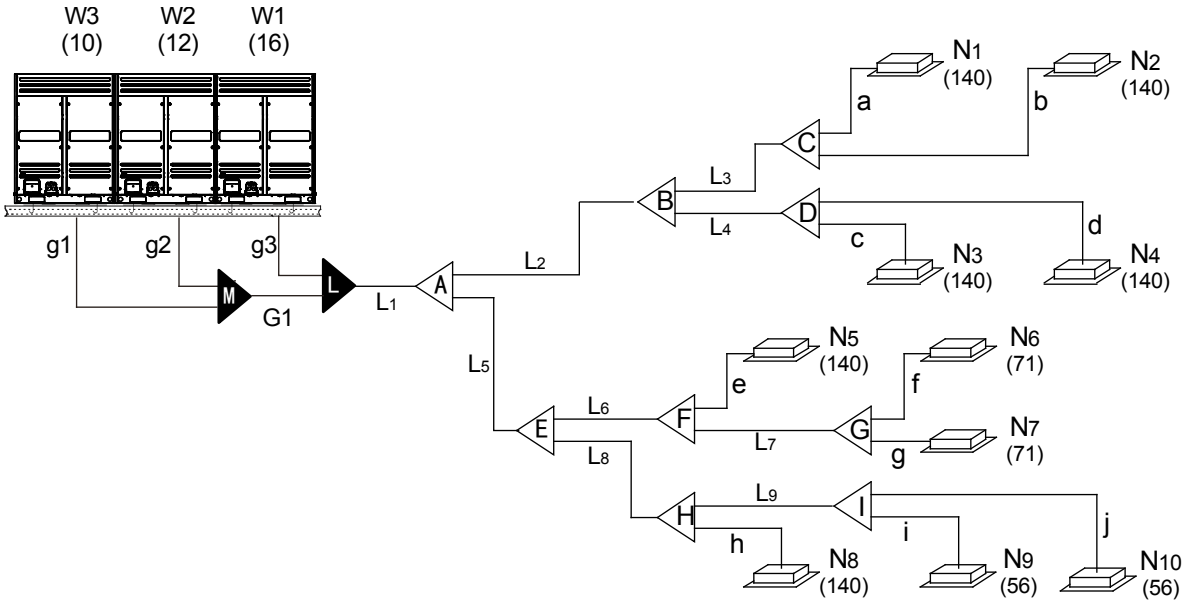

Note: In the above drawing, the capacity unit of indoor side is (×100W), and the outdoor side is HP.

Table 1-2

The Pipe Type	The Detailed Pipe Place	Code
Outdoor unit pipe	The pipe between outdoor unit and outdoor branch, pipe between outdoor branches	g1, g2, g3, G1
Outdoor branch	The outdoor branch assy.	L, M
The main pipe	The pipe between outdoor and the No.1 indoor branch	L1
Indoor main pipe	The pipe between indoor branches	L2~L9
Indoor branch	The indoor branch assy.	A ~ I
Indoor unit pipe	The pipe connecting directly to indoor unit	a ~ j

1.1.2.1 Selection of the indoor unit pipes

E.g. The pipe (a ~ j) in the above drawing.
Please refer to the following table.

Table 1-3

The total capacity of Indoor units(×100W)	When indoor unit pipe length≤10m		When indoor unit pipe length>10m	
	Gas side	Liquid side	Gas side	Liquid side
A≤45	Φ12.7mm	Φ6.35mm	Φ15.9mm	Φ9.53mm
A≥56	Φ15.9mm	Φ9.53mm	Φ19.1mm	Φ12.7mm

1.1.2.2 Selection of the branches and indoor main pipe

E.g. The branches (A ~I) and indoor main pipe (L2~L9) in the above drawing.
Please refer to the following table.

Table 1-4

The capacity of downward indoor units(×100W)	The indoor main pipe dimension (mm)		The branches
	Gas pipe	Liquid pipe	
A<166	Φ15.9	Φ9.53	FQZHN-01D
166≤A<230	Φ19.1	Φ9.53	FQZHN-01D
230≤A<330	Φ22.2	Φ9.53	FQZHN-02D
330≤A<460	Φ28.6	Φ12.7	FQZHN-03D
460≤A<660	Φ28.6	Φ15.9	FQZHN-03D
660≤A<920	Φ31.8	Φ19.1	FQZHN-03D
920≤A<1350	Φ38.1	Φ19.1	FQZHN-04D
1350≤A<1800	Φ41.3	Φ22.2	FQZHN-05D
1800≤A	Φ44.5	Φ25.4	FQZHN-05D

1.1.2.3 Selection of the main pipe (L1)

E.g. The main pipe (L1) in the above drawing
Please refer to the following table:

Table 1-5

The capacity of outdoor units	When total equivalent length<90m			When total equivalent length≥90m		
	Gas side (mm)	Liquid side (mm)	The indoor No.1 distributor	Gas side (mm)	Liquid side (mm)	The indoor No.1 branch
8HP	Φ22.2	Φ9.53	FQZHN-02D	Φ22.2	Φ12.7	FQZHN-02D
10HP	Φ22.2	Φ9.53	FQZHN-02D	Φ25.4	Φ12.7	FQZHN-02D
12~14HP	Φ25.4	Φ12.7	FQZHN-03D	Φ28.6	Φ15.9	FQZHN-03D
16HP	Φ28.6	Φ12.7	FQZHN-03D	Φ31.8	Φ15.9	FQZHN-03D
18~22HP	Φ28.6	Φ15.9	FQZHN-03D	Φ31.8	Φ19.1	FQZHN-03D
24HP	Φ28.6	Φ15.9	FQZHN-03D	Φ31.8	Φ19.1	FQZHN-03D
26~32HP	Φ31.8	Φ19.1	FQZHN-03D	Φ38.1	Φ22.2	FQZHN-04D
34~48HP	Φ38.1	Φ19.1	FQZHN-04D	Φ38.1	Φ22.2	FQZHN-04D
50~64HP	Φ41.3	Φ22.2	FQZHN-05D	Φ44.5	Φ25.4	FQZHN-05D
64~72HP	Φ44.5	Φ25.4	FQZHN-05D	Φ54.0	Φ25.4	FQZHN-06D

Notice: If the total indoor units' capacity is more than the total outdoor units', please select the main pipe diameter according to the bigger one.

E.g. When the total capacity of 16HP+16HP+14HP paralleled outdoor units is 46HP, if the total pipe length is more than 90m, the pipe diameter is Φ38.1 and Φ22.2 according to the above table. While the total indoor units' capacity is 136kW, the pipe diameter is Φ41.3 and Φ22.2 according to the No.**1.1.2.2** table. Then, according to the principle of selecting the bigger, the main pipe diameter should beΦ41.3 and Φ22.2.

1.1.2.4 Selection of the branch (L, M) and the outdoor unit pipe (g1, g2, g3, G1)

E.g. The branch (L, M) and outdoor unit pipe (g1, g2, g3, G1) in the above drawing.
When there is only single outdoor unit, please refer to the following table:

Table 1-6

Model	The outdoor unit pipe diameter (mm)	
8HP,10HP	Φ25.4	Φ12.7
12HP,14HP,16HP	Φ31.8	Φ15.9
18HP	Φ31.8	Φ19.1

When the multi outdoor units are paralleled, please refer to the following table:

Table 1-7

Outdoor unit quantity	Drawing example	Outdoor unit pipe diameter(mm)	Outdoor branch
2	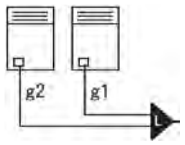	g1,g2： 8,10HP：Φ25.4/12.7； 12～18HP：Φ31.8/Φ15.9	L： TFQZHW-02N1D
3	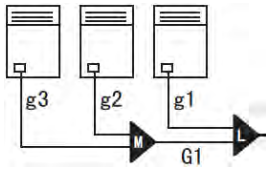	g1,g2,g3： 8,10HP：Φ25.4Φ/12.7； 12～18HP：Φ31.8Φ/15.9； G1：Φ38.1/Φ19.1	L+M： TFQZHW-03N1D
4	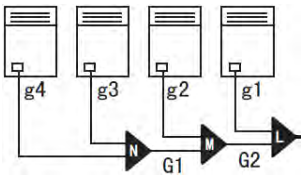	g1,g2,g3,g4： 8,10HP：Φ25.4Φ/12.7； 12～18HP：Φ31.8/Φ15.9； G1：Φ38.1/Φ19.1； G2：Φ41.3/Φ22.2	L+M+N： TFQZHW-04N1D

Notice: All branches must be purchased from Trust.

1.1.3 Pipe selection example

Fig 1-3

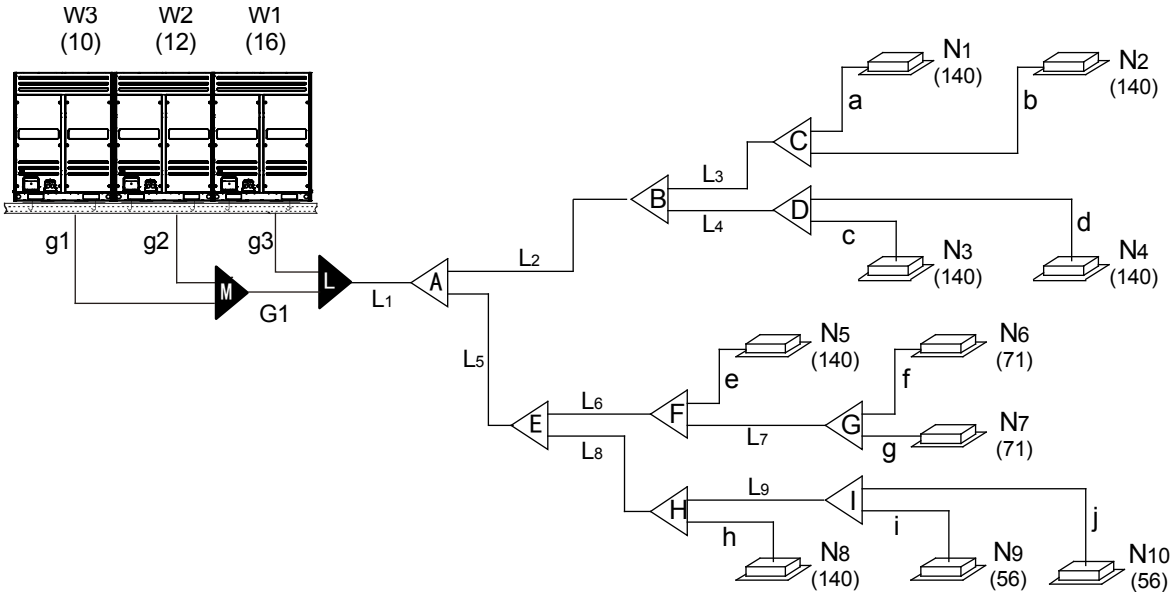

Notice: Suppose total equivalent pipe length beyond 90m.

1.1.3.1 Select each indoor unit pipe(a~j) according to the table 1-3:

Indoor unit pipe	capacity of indoor units (×100W)	Range	indoor unit pipe length	Pipe size Gas/liquid
a	140	A≥56	Suppose ≤10m	Φ15.9/Φ9.53
b	140	A≥56	Suppose ≤10m	Φ15.9/Φ9.53
c	140	A≥56	Suppose ≤10m	Φ15.9/Φ9.53
d	140	A≥56	Suppose >10m	Φ19.1/Φ12.7
e	140	A≥56	Suppose >10m	Φ19.1/Φ12.7
f	71	A≥56	Suppose ≤10m	Φ15.9/Φ9.53
g	71	A≥56	Suppose ≤10m	Φ15.9/Φ9.53
h	140	A≥56	Suppose ≤10m	Φ15.9/Φ9.53
i	56	A≥56	Suppose ≤10m	Φ15.9/Φ9.53
Suppose j>10m	56	A≥56		Φ19.1/Φ12.7

1.1.3.2 Select main pipe(L1),indoor main pipe(L2-L9),indoor branch(A-I) according to the table 1-4

Indoor main pipe/ indoor branch	Total capacity of indoor units (×100W)	Range	Pipe dimension (Gas/Liquid)	Branch
L3/C	N1+N2=280	230≤A<330	Φ22.2/Φ9.53	TFQZHN-02D
L4/D	N3+ N4=280	230≤A<330	Φ22.2/Φ9.53	TFQZHN-02D
L2/B	N1+……+N4=560	460≤A<660	Φ28.6/Φ15.9	TFQZHN-03D
L7/G	N6+N7=142	A<166	Φ15.9/Φ9.53	TFQZHN-01D
L6/F	N5+……+N7=282	230≤A<330	Φ22.2/Φ9.53	TFQZHN-02D
L9/I	N9+N10=136	230≤A<330	Φ22.2/Φ9.53	TFQZHN-02D
L8/H	N8+……+N10=276	230≤A<330	Φ22.2/Φ9.53	TFQZHN-02D
L5/E	N5+……N10=558	460≤A<660	Φ28.6/Φ15.9	TFQZHN-03D
L1/A	N1+……N10=1118	920≤A<1350	Φ38.1/Φ19.1	TFQZHN-04D

1.1.3.3 Select main pipe(L1) and outdoor unit pipe(g1-g3,G1)，outdoor branch,

Main pipe/outdoor unit pipe/branch	Model	The Max. equivalent pipe length≥ 90m	Range	Branch	Refer to
		Gas Side/ Liquid Side			
g1	10HP	Φ25.4 (Welding)/ Φ12.7(Flaring Nut)	8≤W3≤10HP	/	according to the table1-7
g2	14HP	Φ31.8(Welding)/15.9 (Flaring Nut)	12≤W2≤16HP	/	
g3	16HP	Φ31.8(Welding)/15.9 (Flaring Nut)	12≤W1≤16HP	/	
G1	24HP	Φ38.1Welding)/ Φ19.1(Welding)	Two modular combination	/	
L1	40HP	Φ38.1(Welding)/ Φ19.1(Welding)	34-48HP	/	according to the table 4-5
L+M	/	/	Three modular combination	TFQZHW-03N1D	according to the table 1-7

1.1.3.4 Compare the total capacity from indoor side and outdoor side, select the main pipe diameter according to the bigger one.

Main pipe L1 in the Fig.4-3, which upstream outdoor units total capacity is 10+12+16＝38, base on table.4-5, the gas/liquid pipe diameter areΦ38.1/Φ22.2, total capacity of the downstream indoor unit is 140×6+56×2+71×2＝1094, based on table.4-4, the gas/liquid pipe diameter are Φ38.1/Φ19.1, take the large one for your selection, final confirm the main pipe diameter is: gas/liquid pipe Φ38.1/Φ22.2.

1.1.4 Branch drawing

1.1.4.1 Indoor branch drawing

Indoor branch	Gas side	Liquid side
TFQZHN-01D	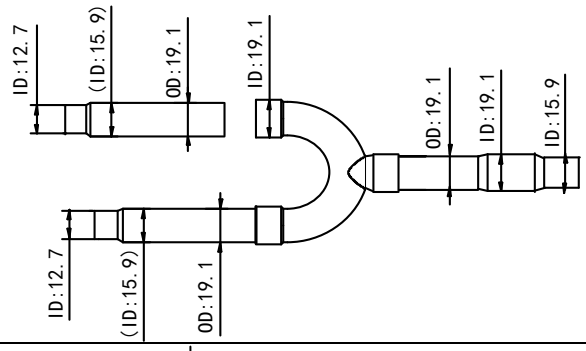	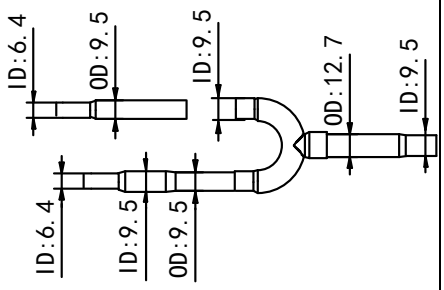
TFQZHN-02D	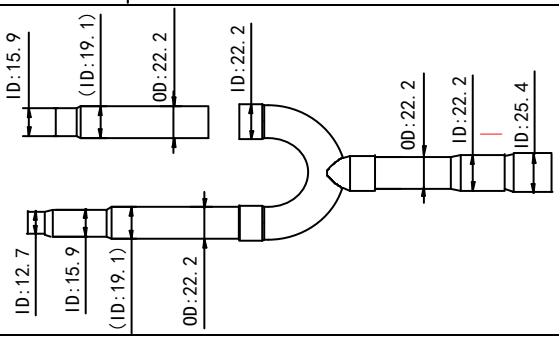	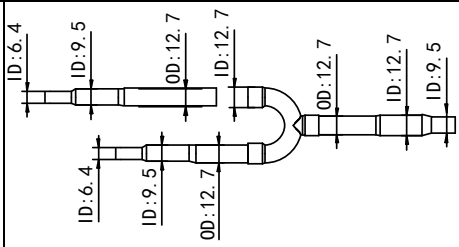

TFQZHN-03D	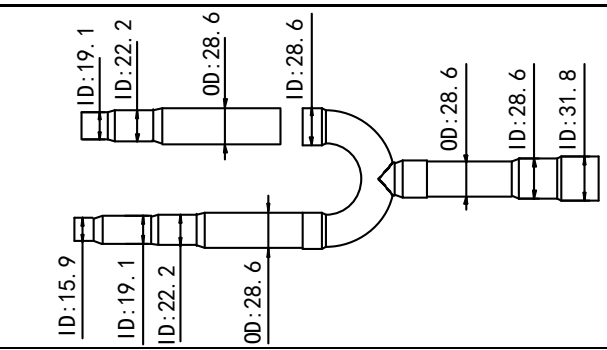	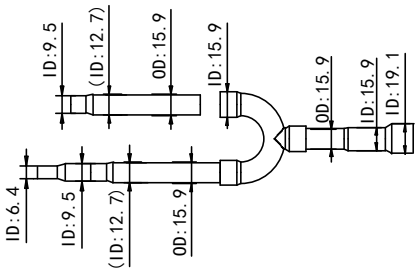
TFQZHN-04D	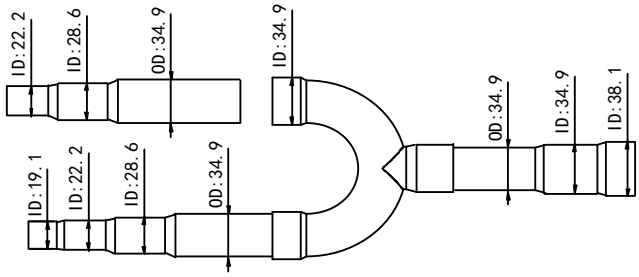	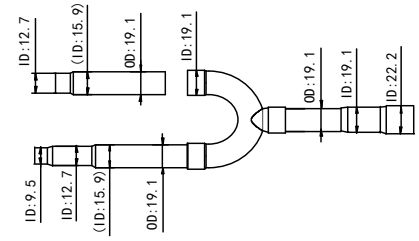
TFQZHN-05D	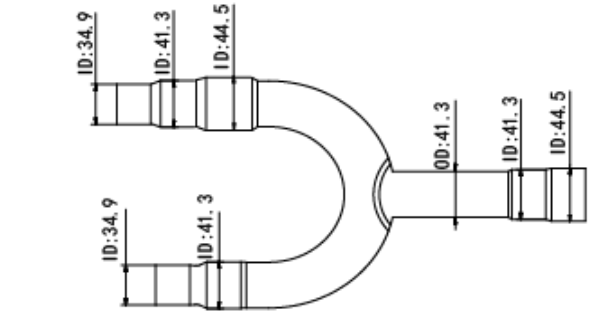	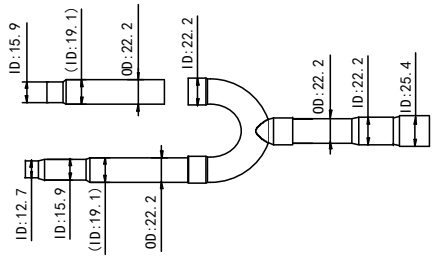
TFQZHN-06D	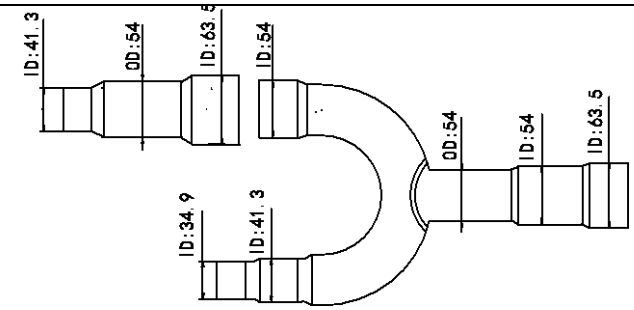	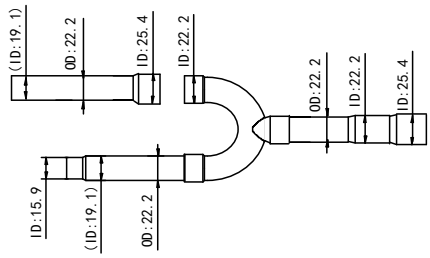

1.1.4.2 Outdoor branch drawing

Outdoor branch	TFQZHW-02N1D	TFQZHW-03N1D	TFQZHW-04N1D
Gas side	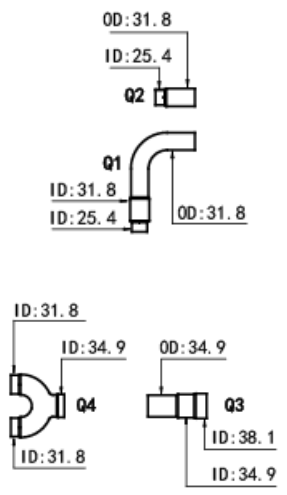	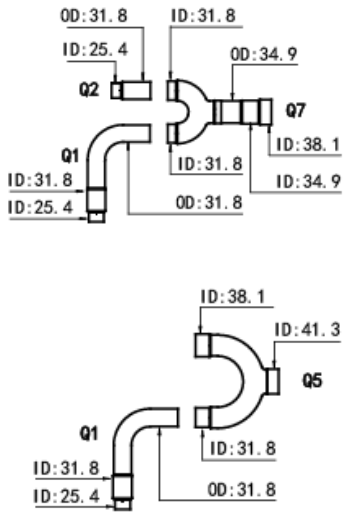	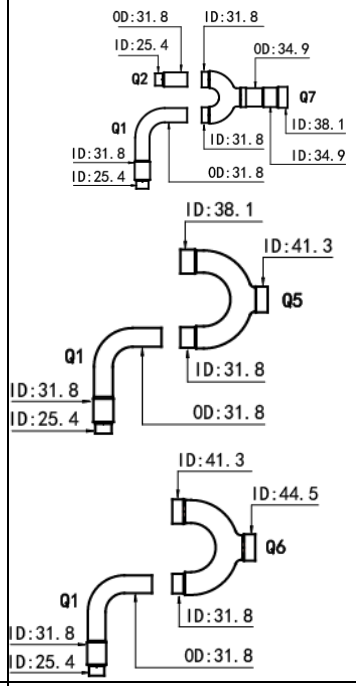
Liquid side	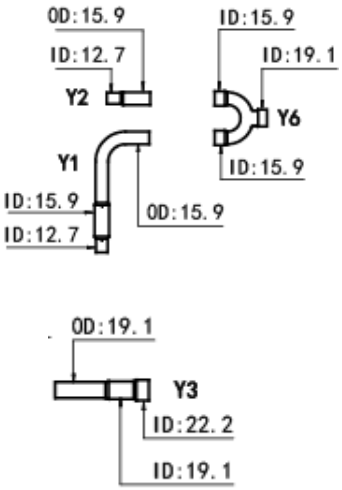	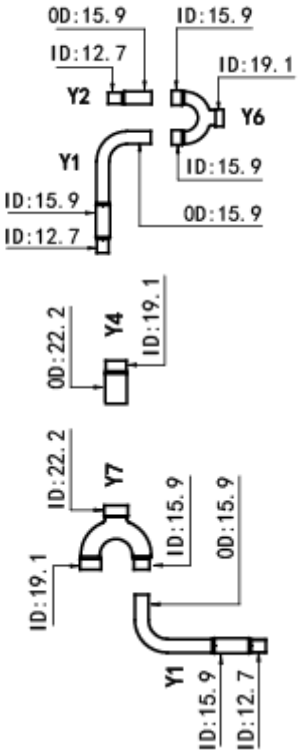	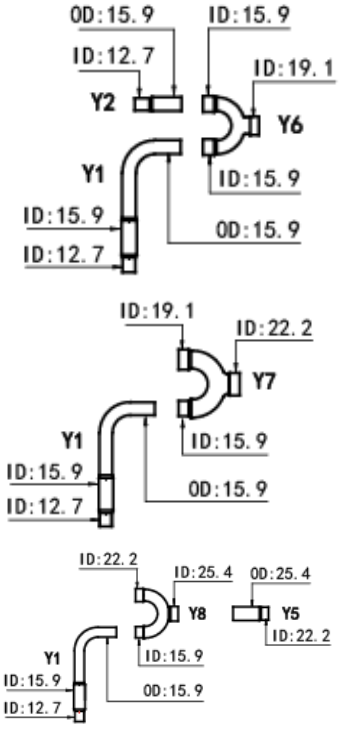
Oil balance pipe	/	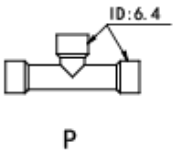	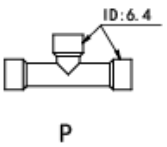 (2 pcs)

1.2 Installation Procedure

1.2.1 Importance of the Installation Operation

Effect of installation issues on equipment:

Phenomenon 1

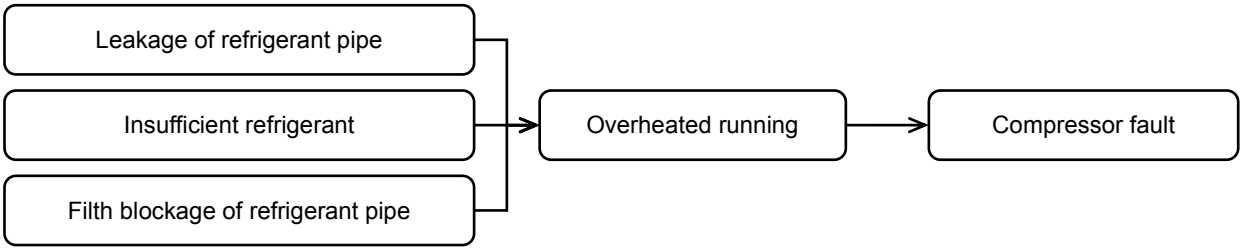

Phenomenon 2

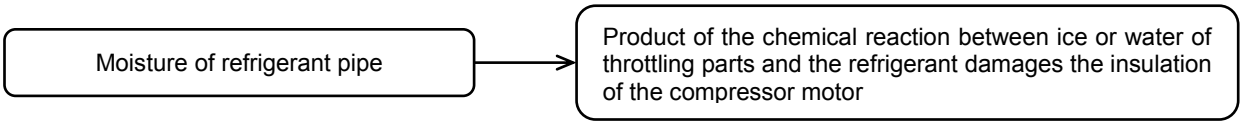

Phenomenon 3

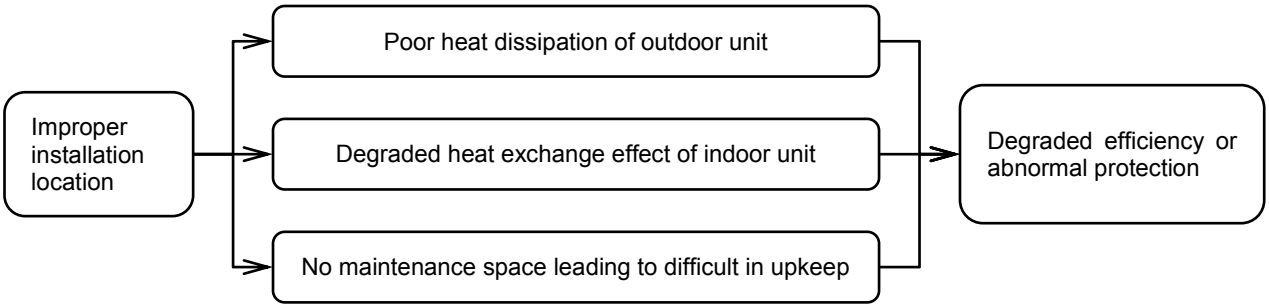

Phenomenon 4

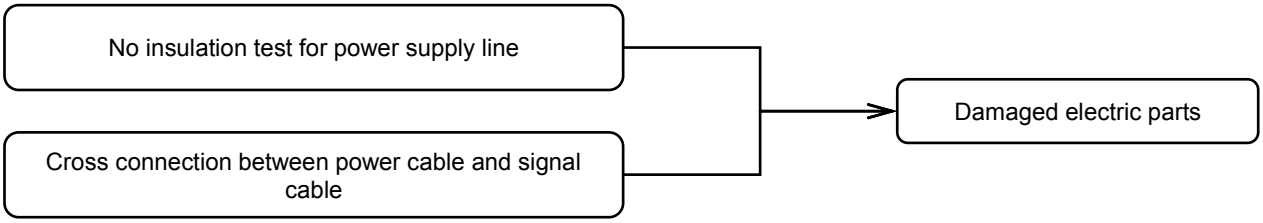

1.2.2 General procedure

Pipe pre-install engineering ..... Ensure that the water drainage pipe inclines downward

⇩

Installing indoor unit Make sure the model is correct.

⇩

Refrigerant piping engineering ..... Keep the refrigerant pipes dry, clean and sealed

⇩

Water drainage piping engineering ..... Downward inclination

⇩

Air duct engineering ..... Ensure sufficient ventilation rate

⇩

Thermal insulation engineering ..... Ensure no gap between the thermal insulation materials

⇩

Electric engineering ..... Select proper power cables

(signal cable, power cable) ..... (Signal cable should use 3-cores shielded wires)

⇩

Basement work for outdoor unit ..... Avoid short-circuit ventilation and ensure sufficient maintenance space

⇩

Installing outdoor unit ..... Avoid short-circuit ventilation and ensure sufficient maintenance space

Air tightness test ..... Check whether the air pressure remains at 4.0Mpa **(R410a)** after correction is made within 24 hours

Vacuum drying ..... Use vacuum pump that has a vacuum degree of less than -775mmHg

recharging refrigerant ..... Record the amount of refrigerant to be recharged on the outdoor unit and document it

Installing decorative panel ..... Ensure no gap between decorative panel and ceiling

Test Running and commissioning ..... Run the indoor units one by one to check whether any pipe or cable is incorrectly installed

Delivering operation instructions ..... Deliver related materials while providing operation instruction to the user

Note: The general procedure for refrigerant machine is subject to change according to the situation

1.2.3 Install indoor unit's procedure

Confirm installation position → Label installation position → Install hooks → Install indoor units

Note: 1. The hook must strong enough to sustain the weight of indoor unit.
2. Check the models of indoor units before installation.
3. Pay attention to the main devices, such as the pipeline.
4. Hold enough places for maintenance.

1.2.4 Refrigerant pipe procedure

Install indoor units → Install pipe → Weld → Add Nitrogen →

Temporary pipeline → Flush → Pressure test → Vacuum dry

1.2.5 Drainage pipe procedure

Install indoor units → Connect drainpipe → Check water leakage →

Drainpipe heat-insulation and test-run

Note: It is no need to insulate the drainpipe if you choose the plastic pipe as drainpipe.

1.2.6 Electric wiring

1.2.6.1 Please select power supply for indoor unit and outdoor unit separately. Both indoor units and outdoor units should be grounded well.
1.2.6.2 The power supply should have specified branch circuit with leakage protector and manual switch.
1.2.6.3 Please put the connective wiring system between indoor unit and outdoor unit with refrigerant piping system together.
1.2.6.4 Power wiring should be done by professional electrician and complied with relevant National Electric Standard.
1.2.6.5 The power supply, leakage protector and manual switch of all the indoor units connecting to the same outdoor unit should be universal. (Please set all the indoor unit power supply of one system into the same circuit.)
1.2.6.6 It is suggested to use 3-core shielded wire as signal wire between indoor and outdoor units, multi-core wire is unavailable. Pay attention to the consistency. When signal wire parallel to the power wire, please keep enough distance (about 300mm at least) to prevent interference.
1.2.6.7 The power wire and signal wire can't be enlaced together.

1.2.7 Lay the indoor pipeline

Note: Collocate the air-outlet reasonably to prevent airflow short-circuit. Check the static pressure whether in the allowable range. The air filters should be easy to unpick and wash. Do pressure test on pipeline.

1.2.8 Heat-insulation procedure

Refrigerant pipe work → Check the heat-insulated part → Pressure test → Heat-insulation work

Note: For welding part, flare part and branch pipe, heat-insulation work must be done after finished the pressure test.

1.2.9 Install outdoor unit

Note: 1. Gutter must be set around the foundation to drain the condensation water.

2. When installing outdoor units at the roof, please check the strength of the roof and pay attention not to destroy the waterproof of the roof.

1.2.10 Recharge refrigerant procedure

Calculate the added volume according to liquid pipe length → Recharge refrigerant

Note: Please calculate the additional amount of refrigerant according to the formula that we supply to you, and the calculation result must be correct

1.2.11 Main points of test running and Commissioning

Please check the following issues before turning on the power:

1.2.11.1 Vacuum dry: Make sure the vacuum degree accord with our requirement about 10^{-5}.

1.2.11.2 Wiring: Includes the power wiring and communication wiring; Recheck the connection according to our corresponding wire diagrams. Especially, please remember our communication wire is polar; it means you must connect the communication wire correspondingly to the terminal block.

1.2.11.3 Additional charge of refrigerant: Recheck the calculation formula and recalculate the total recharge volume according to our supplied formula.

1.2.11.4 Open the stop-valve of gas and liquid pipe with Allen key; Check leakage of stop-valve with soap water. Please confirm whether the outdoor unit has been connected to the power for 12hr before start test running.

Test running: Turn on all of the indoor units with cooling mode and set the temperature in 17degree with high fan speed first, after the system operated, test following operation parameters of the system, including indoor units and outdoor units parameters.

1.3 Installation Preparation

1.3.1 Installation tools and instruments

All the necessary tools should be available, and their models and specifications should meet the installation and technical requirements. The instruments and meters should be tested or verified, and their scales and accuracy should meet the requirements. The common tools for installing refrigerant machine are listed below.

No.	Name	Specification/Model	No.	Name	Specification/Model
1	Pipe cutter		15	Electronic scale	
2	Steel saw		16	Stop	
3	Pipe bender	Spring, mechanic	17	Thermometer	
4	Pipe expander	Depend on the pipe diameter specification	18	Meter rule	
5	Flaring tool	Depend on the pipe diameter specification	19	Screw driver	“-”, “+”
6	Brazing welder	Depend on the nozzle size		Adjustable spanner	
7	Scraper		21	Resistance tester	
8	File/Rasp		22	Electro probe	
9	Injection tube		23	Multimeter	
10	Double-ended pressure gauge	4.0MPa	24	Pressure reducing valve	
11	Pressure gauge	1.5MPa, 4.0MPa	25	Wire pliers	
12	Vacuum gauge	-756mmHg	26	Clamping pliers	
13	Vacuum pump	At least 4 liters/second	27	Hexagon ring spanner	
14	Horizontal rule		28	Torque wrench	

In addition, tools such as electric welder, cutter, A-shape ladder, electric drill, folding machine, forming machine, nitrogen cylinder are also generally used during the installation.

1.3.2 Audit of construction drawings

Before the engineering installation, read carefully the related drawings to understand the design intention, audit the drawings, and then work out a detailed engineering organization plan.

1. Make sure that the pipe diameters and branch pipe models meet the technical specifications.
2. Ratio of slope, drainage mode and thermal insulation of condensate water.
3. Making of air duct and air opening, and air ventilation organization.
4. Configuration specifications, model and control mode of power cables.
5. Making, total length and control mode of control cable.

The engineering construction staff should follow the construction drawing strictly during the construction. If any change is required, such change should be approved by the design department and be documented.

1.3.3. Construction organization plan

Construction organization plan serves as the comprehensive technical and economic documents that guide the construction preparation and scientific construction organization. A reasonable construction organization plan and careful implementation of it are essential to ensure smooth construction, shorten construction period, ensure construction quality, and improve economic results.

The construction plan should be concise and focuses on key procedures, construction method, and time

coordination, space disposal of the construction around the features of the engineering, thus to ensure smooth construction operation.

1.3.4. Training of installation team

Establish sound training mechanisms. Service engineers are required to train installation team managers, work supervisors to train workers, and managers to train workers of special type. Establish a management mechanism in which pre-working training, before-shift disclosure and after-shift implementation are available.

1.3.5. Coordination with other sectors

Ensure smooth coordination and meticulous organization between these sectors: air conditioning, civil work, electricity, water supply and drainage, fire protection, decoration, intelligence, etc. Try best to lay pipes of the air conditioning system along the bottom of the beam. If pipes meet together at the same height, follow these principles:

1. Ensure that gravity pipes take precedence over water drainage pipes, air ducts and pressure pipes.
2. Ensure that large pipes take precedence over air ducts and small pipes.

1.3.6. Pipe pre-install engineering

1.3.6.1. Operation procedure

Raise requirements to the civil work sector and coordinate → Determine the position, size and quantity of the machines, and conduct pre-installing → Check the pre-installing results

1.3.6.2. Pipeline route

1. The pipe for condensate water should have a downward slope (the slope should be at least 1/100).
2. The diameter of the through hole for the refrigerant pipe should take the thickness of the thermal insulation material into consideration (it is recommended to lay the gas pipe and liquid pipe in two separate columns).
3. Note that sometimes through hole is not allowed because of the structure of the beam.

eg. Strengthen the transfixion hole

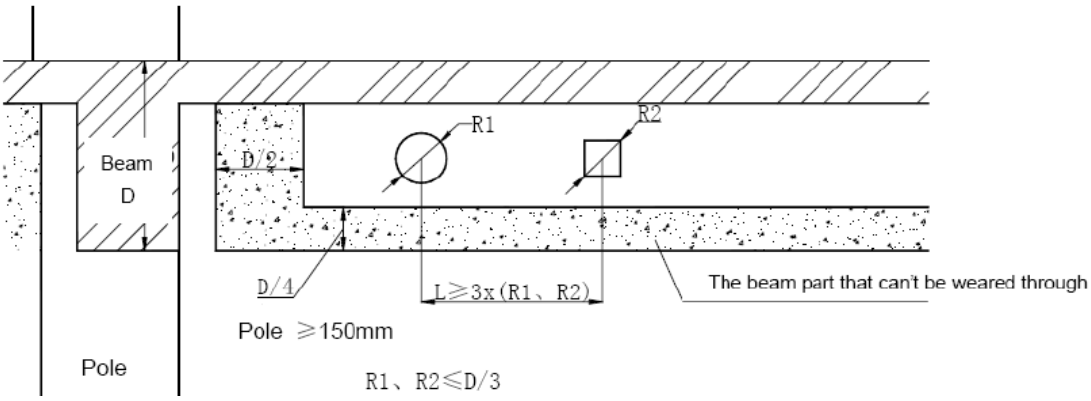

Highlights:

1) When selecting the parts to be pre-installed, ensure that the weight of the accessories is also calculated.
2) In a situation where metal parts to be pre-installed is not allowed, use expansion bolts while ensuring sufficient load-bearing capacity.

Caution: The above figure is for reference only. It is not recommended to dig holes on either the beam or the shear wall. If such operation is indeed needed, please consult the property owner (or manager) and the civil work sector, and get written approval from the competent authority.

1.3.7 Warning

(1) Be sure only trained and qualified service personnel to install, repair or service the equipment.
Improper installation, repair, and maintenance may result in electric shocks, short-circuit, leaks, fire or other damage to the equipment.
(2) Install according to this installation instructions strictly.
If installation is defective, it will cause water leakage, electrical shock fire.
(3) When installing the unit in a small room, take measures against to keep refrigerant concentration from exceeding allowable safety limits in the event of refrigerant leakage.
Contact the place of purchase for more information. Excessive refrigerant in a closed ambient can lead to oxygen deficiency.
(4) Use the attached accessories parts and specified parts for installation. otherwise, it will cause the set to fall, water leakage, electrical shock fire.
(5) Install at a strong and firm location which is able to withstand the set' s weight.
If the strength is not enough or installation is not properly done, the set will drop to cause injury.
(6) The appliance must be installed 2.5m above floor.
(7) The appliance shall not be installed in the laundry.
(8) Before obtaining access to terminals, all supply circuits must be disconnected.
(9) The appliance must be positioned so that the plug is accessible.
(10) The enclosure of the appliance shall be marked by word, or by symbols, with the direction of the fluid flow.
(11) For electrical work, follow the local national wiring standard, regulation and installation instruction. An

independent circuit and single outlet must be used.
If electrical circuit capacity is not enough or defect in electrical work, it will cause electrical shock fire.
(12) Use the specified cable and connect tightly and clamp the cable so that no external force will be acted on the terminal.
If connection or fixing is not perfect, it will cause heat-up or fire at the connection.
(13) Wiring routing must be properly arranged so that control board cover is fixed properly.
If control board cover is not fixed perfectly, it will cause heat-up at connection point of terminal, fire or electrical shock.
(14) If the supply cord is damaged, it must be replaced by the manufacture or its service agent or similarly qualified person in order to avoid a hazard.
(15) An all-pole disconnection switch having a contract separation of at least 3mm in poles should be connected in fixed wiring.
(16) When carrying out piping connection, take care not to let air substances go into refrigeration cycle.
Otherwise, it will cause lower capacity, abnormal high pressure in the refrigeration cycle, explosion and injury.
(17) Do not modify the length of the power supply cord or use of extension cord, and do not share the single outlet with other electrical appliances.
Otherwise, it will cause fire or electrical shock.
(18) Carry out the specified installation work after taking into account strong winds, typhoons or earthquakes.
Improper installation work may result in the equipment falling and causing accidents.
Remark: Failure to observe a warning may result in death.

1.3.8 Caution

(1) Ground the air conditioner.
Do not connect the ground wire to gas or water pipes, lightning rod or a telephone ground wire. Incomplete grounding may result in electric shocks.
(2) Be sure to install an earth leakage breaker.
Failure to install an earth leakage breaker may result in electric shocks.
(3) Connect the outdoor unit wires, and then connect the indoor unit wires.
You are not allowed to connect the air conditioner with the power source until wiring and piping the air conditioner is done.
(4) While following the instructions in this installation manual, install drain piping in order to ensure proper drainage and insulate piping in order to prevent condensation.
Improper drain piping may result in water leakage and property damage.
(5) Install the indoor and outdoor units, power supply wiring and connecting wires at least 1 meter away from televisions or radios in order to prevent image interference or noise.
Depending on the radio waves, a distance of 1 meter may not be sufficient enough to eliminate the noise.
(6) The appliance is not intended for use by young children or infirm persons without supervision. Young children should be supervised to ensure that they do not play with the appliance.
(7) Don't install the air conditioner in the following locations:
There is petrolatum existing.
There is salty air surrounding (near the coast).
There is caustic gas (the sulfide, for example) existing in the air (near a hot spring).
The Volt vibrates violently (in the factories).
In buses or cabinets.
In kitchen where there is full of oil gas.
There is strong electromagnetic wave existing.
There are inflammable materials or gas.
There is acid or alkaline liquid evaporating.
Other special conditions.
(8) The insulation of the metal parts of the building and the air conditioner should comply with the regulation of National Electric Standard.
Remark: Failure to observe a caution may result in injury or damage to the equipment.

2. Units Installation

2.1 Installation of Indoor Unit

2.1.1 Installation procedure

Determine the installation position → Scribing and locating → Installing suspension road → Installing the indoor unit

2.1.2 Cautions for installation and check

1) Drawing check: Confirm the specification, model and installation direction of the set.
2) Height: Ensure that it closely fits the ceiling.
3) Suspension strength: The suspension road shall be strong enough to bear the weight twice of the indoor unit to ensure that no abnormal vibration or noise is generated when the set is running.
4) When installing the indoor unit, ensure that sufficient space is available for installing condensate water pipe.
5) Horizontal degree: It shall be kept within ±1°.

Purpose: Ensure smooth drainage of condensate water. Also ensure stability of the machine body to induce the risks caused by vibration and noise.

Hidden trouble of incorrect operation: a. Water leakage; b. Abnormal vibration and noise

6) Ensure sufficient maintenance & upkeep is available (keep a large enough maintenance hole, typically 400x400mm).
7) Avoid short-circuit ventilation.

Purpose: Ensure sufficient heat exchange of indoor unit and good air conditioning effect.

Risk of incorrect operation: Poor air conditioning effect; abnormal protection of the set.

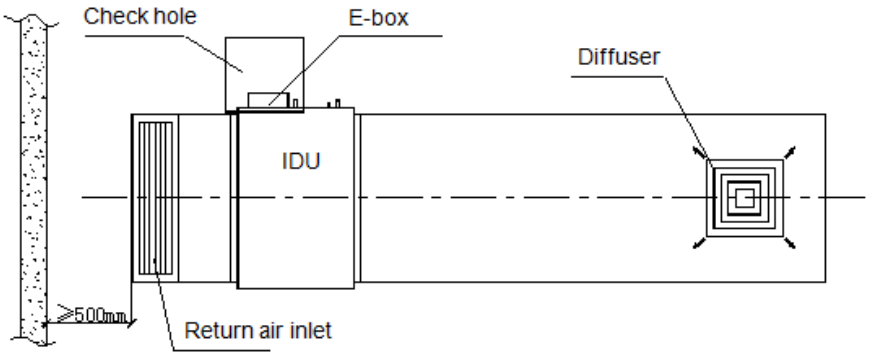

2.2. Installation of Outdoor Unit

2.2.1 Acceptance and unpacking

1. After the machine arrives, check whether it is damaged during the shipment. If the surface or inner side of the machine is damaged, submit a written report to the shipping company.
2. Check whether the model, specification and quantity of the equipment conform to the contract.
3. After removing the outer package, please keep the operation instructions well and count the accessories.

2.2.2 Hoisting outdoor unit

Do not remove any package before the hoisting. Use two ropes to hoist the machine, keep the machine in balance, and then raise it safely and steadily. In case of no package or if the package is damaged, use plates or packing material to protect it.

When conveying and hoisting the outdoor unit, keep it upright, ensure that the slope does not exceed 30°, and keep safety in mind.

2.2.3 Selecting installation position

1. Ensure that the outdoor unit is installed in a dry, well-ventilated place.
2. Ensure that the noise and exhaust ventilation of the outdoor unit do not affect the neighbors of the property owner or the surrounding ventilation.
3. Ensure that the outdoor unit is installed in a well-ventilated place that is possibly closest to the indoor unit.
4. Ensure that the outdoor unit is installed in a cool place without direct sunshine exposure or direct radiation of a high-temperature heat source.
5. Do not install the outdoor unit in a dirty or severely polluted place, so as to avoid blockage of the heat exchanger in the outdoor unit.
6. Do not install the outdoor unit in a place with oil pollution, salt or high content of harmful gases such as sulfurous gas.

2.2.4 Base for outdoor unit

1. A solid, correct base can:
1) Avoid the outdoor unit from sinking.
2) Avoid the abnormal noise generated due to base.
2. Base types
1) Steel structure base
2) Concrete base (see the figure below for the general making method)

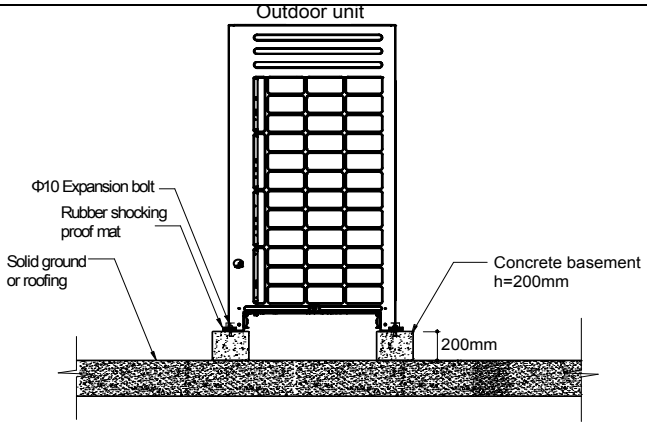

Remark:
The key points to make basement:
1) The master unit's basement must be made on the solid concrete ground. Refer to the structure diagram to make concrete basement in detail, or make after field measurements.
2) In order to ensure every point can contact equality, the basement should be on completely level.
3) If the basement is placed on the roofing, the detritus layer isn't needed, but the concrete surface must be flat. The standard concrete mixture ratio is cement 1/ sand 2/ carpolite 4, and adds Φ10 strengthen reinforcing steel bar, the surface of the cement and sand plasm must be flat, border of the basement must be chamfer angle.
4) In order to drain off the seeper around the equipment, a discharge ditch must be setup around the basement.
5) Please check the affordability of the roofing to ensure the load capacity.

2.2.5 Installation highlights for outdoor unit

1. Install vibration isolator or isolating pad between the set and the base by the design specification.
2. Ensure close between the outdoor unit and the base, or significant vibration and noise may occur.
3. Ensure that outdoor unit is well grounded.
4. Before commissioning, do not turn on the valves of the gas pipe and liquid pipe of the outdoor unit.
5. Ensure sufficient maintenance space is available at the installation site.

2.2.6 Installation space for outdoor unit.

1) One row:

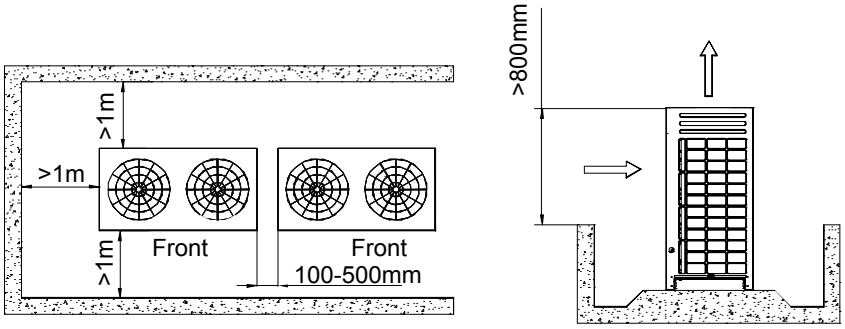

2) Two rows

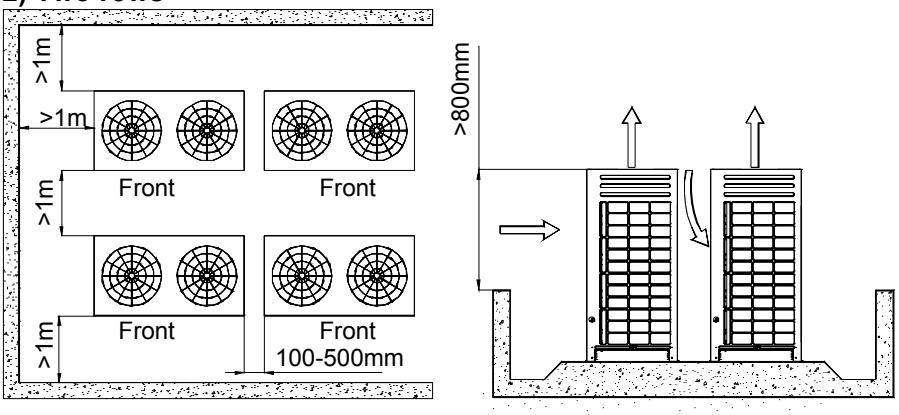

3) More than two rows

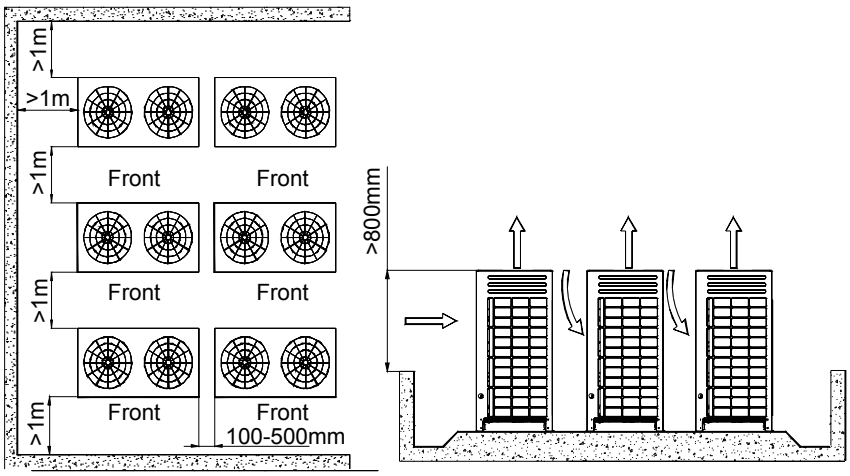

4) When the outdoor unit is lower than the surrounding obstacle,

Refer to the layout used when the outdoor unit is higher than the surrounding obstacle. However, to avoid cross connection of the outdoor hot air from affecting the heat exchange effect, please add an air director onto the exhaust hood of the outdoor unit to facilitate heat dissipation. See the figure below. The height of the air director is HD (namely H-h). Please make the air director on site.

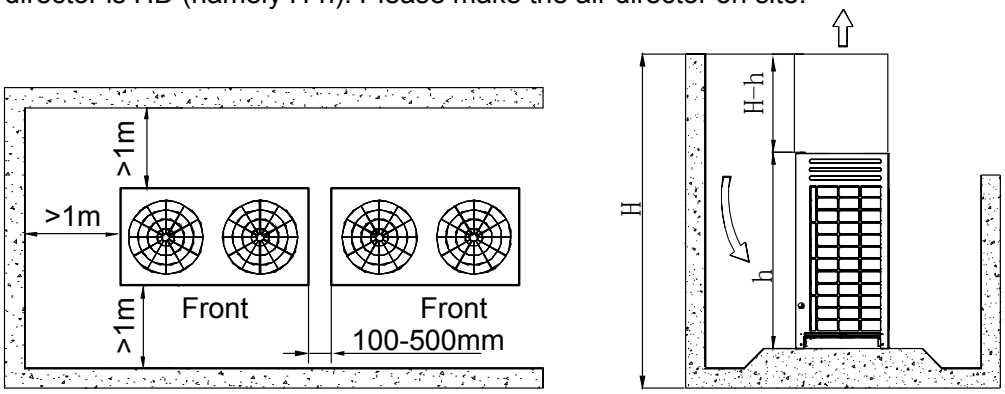

5) For limited space installation

The dimensions should meet the request according to the marks, otherwise, a mechanic exhaust device must be added.

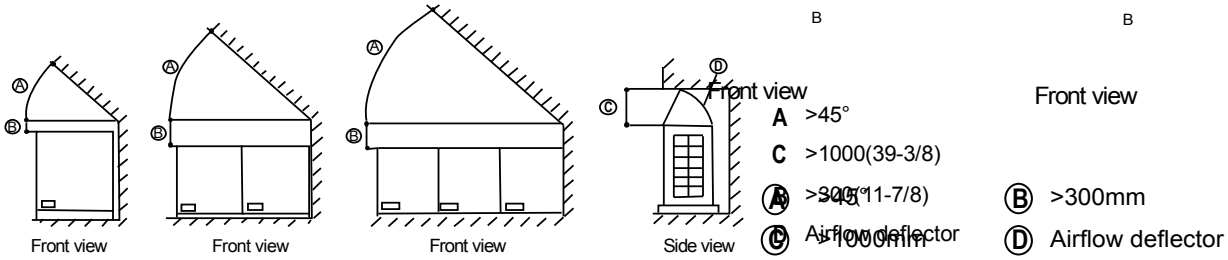

6) Set the snow-proof facility

In snowy areas, facilities should be installed to prevent snow. (See the figure below) (defective facilities may cause malfunction.) Please lift the bracket higher and install snow shed at the air inlet and air outlet.

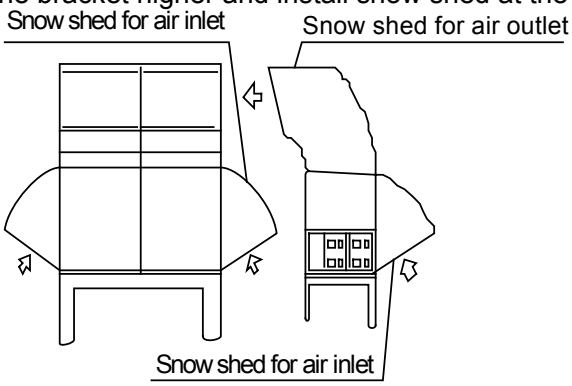

2.2.7 Mount the air deflector

When installing, takes off the mesh firstly, and then conduct in according of the following two schedules.

2.2.7.1 Installation of 8HP,10HP.

Schedule 1:

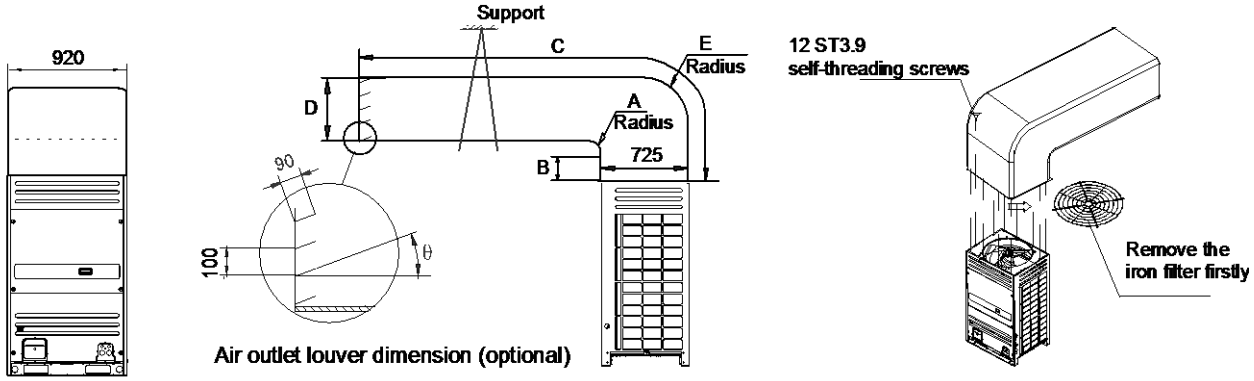

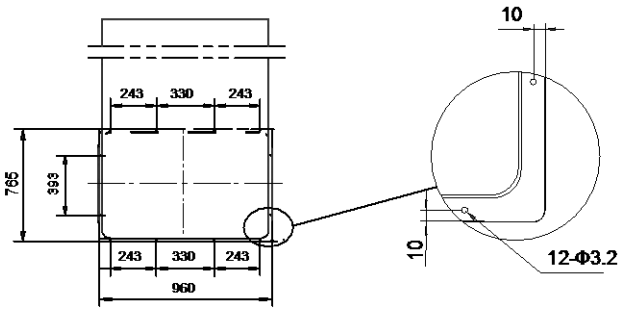

Unit: mm

A	A≥300
B	B≥250
C	C≤3000
D	725≤D≤760
E	E=A+725
θ	θ≤15°

Schedule 2:

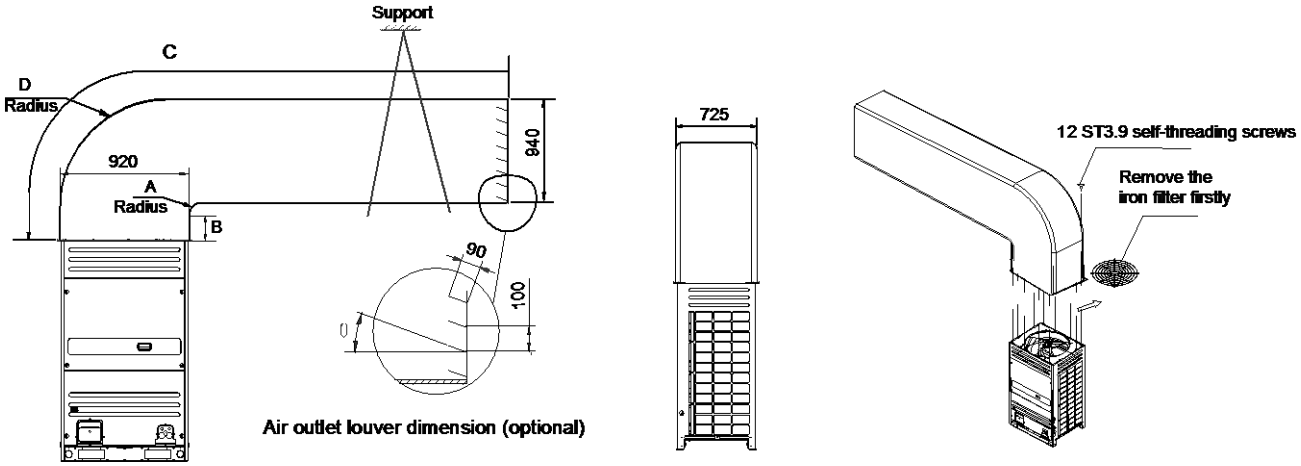

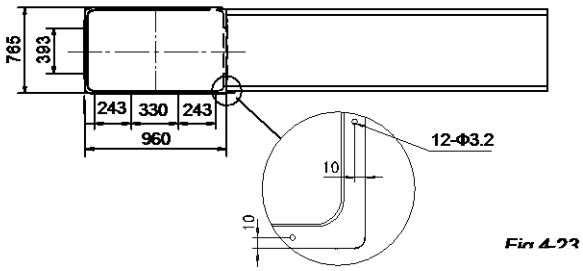

Fig 4-23

Unit: mm

A	A≥300
B	B≥250
C	C≤3000
D	D=A+920
θ	θ≤15°

2.2.7.2 Installation of 12HP,14HP,16HP,18HP

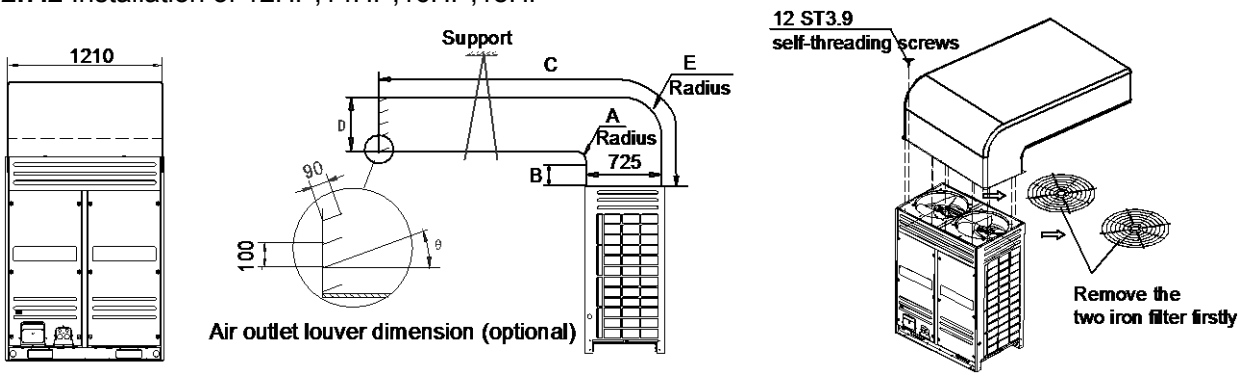

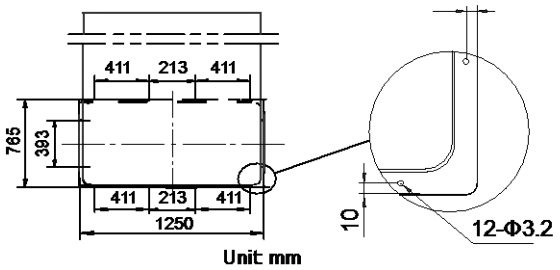

Unit: mm

A	A≥300
B	B≥250
C	C≤3000
D	725≤D≤760
E	E=A+725
θ	θ≤15°

Schedule 2:

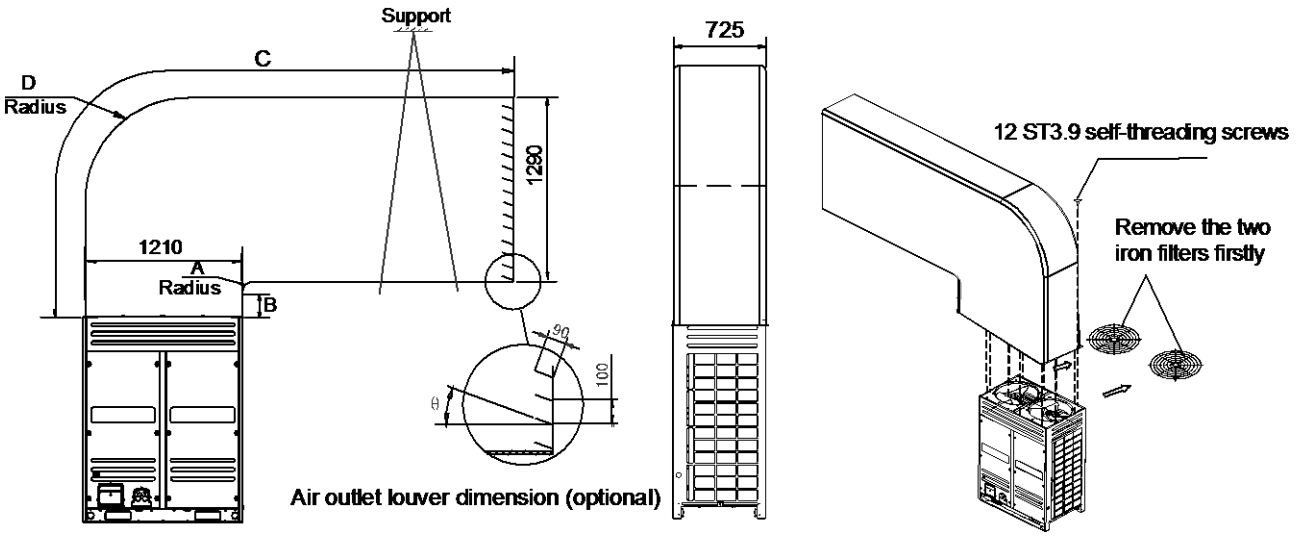

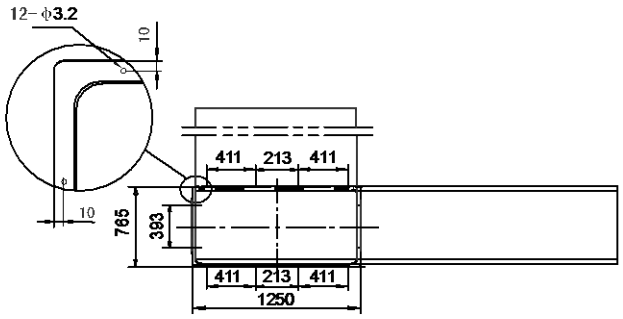

Unit: mm

A	A≥300
B	B≥250
C	C≤3000
D	D=A+1210
θ	θ≤15°

Note: Before install the air deflector, please ensuring the mesh enclosure has been took off; otherwise the air supply efficiency would be block down.
Once mounting the shutter to the unit, air volume, cooling (heating) capacity and efficiency would be block down, this affection enhance along with the angle of the shutter. Thus, we are not recommend you to mount the shutter, if necessary in use, please adjust the angle of shutter no larger than 15°.
Only one bending site is allowanced in the air duct, otherwise, device may be disoperation.

2.2.8 Arrangement of outdoor units

If more than two outdoor units are combined in the system, these outdoor units shall be arranged according to the descending order of their cooling capacity, and the outdoor unit with the highest cooling capacity shall be placed at the first branch pipe. In addition, the outdoor unit with the highest cooling capacity shall be set to master unit, while others shall be set to slave units.

The following takes a system with outdoor units of 40HP (10HP+14HP+16HP) as an example:

1) Place the outdoor unit of 16HP beside the first branch pipe (see the figure below)
2) Place the outdoor units in the descending order of their cooling capacity, namely, 16HP, 14HP and 10HP.
3) Set the outdoor unit of 16HP to master unit, and the outdoor units of 14HP and 10HP to slave unit.

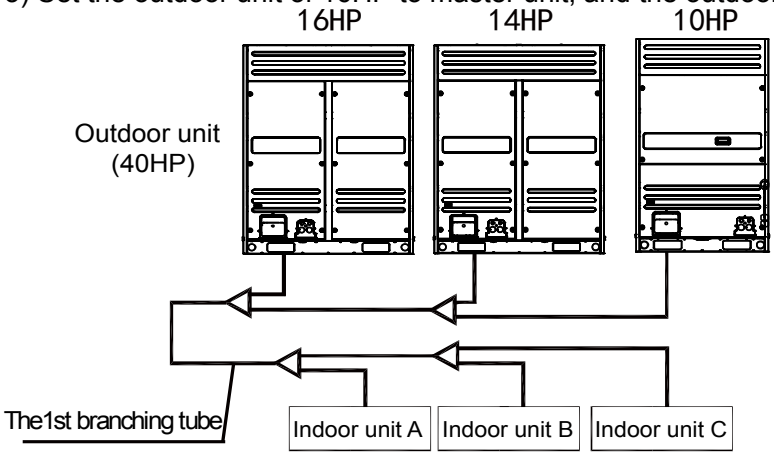

Remark: All the outdoor units should be installed on the location of same level, or it may cause imbalance of refrigerant distributing and lead the fault of the compressors.

Although the V4+ S series outdoor units can auto balance the load due to the master free cycle duty operation, but it is still recommended to install the biggest unit close to the first branch and set as master also.

3. Refrigerant Pipe Engineering

3.1 Refrigerant Pipe Processing

3.1.1Basic requirements

3.1.1.1 Operation procedure

Determine the route and size of the pipeline according to the construction drawing → Make and installing bracket, hanger and support → Make and arrange pipe accessories → Recharge nitrogen gas for protection → Brazing welding → Pipe flushing → air tightness test → Thermal insulation → Vacuum drying

3.1.1.2 Three principles for refrigerant piping

Item	Reasons	Countermeasure
Dry	The rain comes into/ Engineering water comes into/ Produced condensate water in the pipe	The process of tubing must be criterion → Blow cleanly → Vacuum
Cleanness	There are oxide produced by welding\Outside dust\ Sundries comes into	Charge nitrogen gas to prevent when welding Attention the cleanness during the piping process → Blow cleanly
Air tightness	Imprecision weld/ unqualified airproof to bell-mouth/Leakage of the fringe	Use the suited welding rod to weld Comply to the welding operation criteria Comply to bell-mouth connecting operation criteria Comply to the interface operation criteria → Air tightness test

solution.

Purpose of cleansing copper pipe: Remove the lube (industrial oil used during the processing of the copper pipe) attached to the inner wall of the copper pipe. The ingredients of such lube are different from those of the lube used by the R410A refrigerant, and they will produce deposit through reaction, which may cause complicated system fault.

Special Note: Never use CCl4 for pipe cleansing and flushing, or the system will be seriously damaged.

3.1.1.3 Support for refrigerant pipe

1. Fixing horizontal pipe

When the air conditioner is running, the refrigerant pipe will deform (for example, shrunk/expanded or inclined downward). To avoid pipe damage, use hanger or support to support it (see the table below for the criteria).

Pipe Diameter (mm)	Less than Φ20	Φ20-40	Larger than Φ40
Interval between support points (m)	1	1.5	2

In general, gas pipe and liquid pipe should be suspended in parallel, and the interval between support points should be selected according to the diameter of the air pipe. Since the temperature of the flowing refrigerant will change as the operation and working condition change, which will result in hot expansion and cold shrinkage of the refrigerant pipe, so the pipe with thermal insulation should not be clamped tightly, otherwise the copper pipe may get broken due to stress concentration.

2. Fixing vertical pipe

Fix the pipe along the wall according to the pipeline route. Round log should be used at the pipe clip to replace thermal insulation material, “U”-shape pipe should be fixed outside the round log, and the round log should be provided with anticorrosion treatment.

Pipe Diameter (mm)	Less than Φ20	Φ20-40	Larger than Φ40
Interval between support points (m)	1. 5	2. 0	2. 5

3. Local fixing

To avoid stress concentration due to expansion and shrinkage of the pipe, it is usually required to conduct local fixing beside the wall through-holes of the branch pipe and end pipe.

3.1.1.4 Requirements for installing branch pipe subassembly

When laying the branch pipe subassembly, pay attention to the following:

1) Do not replace branch pipe with tee pipe.

2) Follow the construction drawing and installation instructions to confirm the models of branch pipe subassembly as well as the diameters of main pipe and branch pipe.

3) Neither sharp bend (an angle of 90°) nor connection to other branch pipe subassembly is allowed at places within 500mm away from the branch pipe subassembly.

4) Try best to install the branch pipe subassembly at a place that facilitates welding (if doing so is impossible, it is recommended to prefabricate the subassembly).

5) Install vertical or horizontal branch joint, and ensure that the horizontal angle is within 10°. Refer to the right side picture:

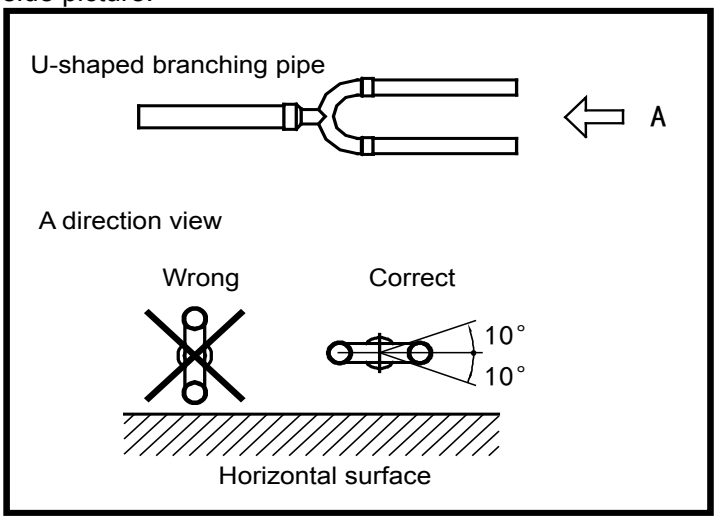

6) For avoid oil accumulate at the outdoor unit, please install the branching pipes properly.

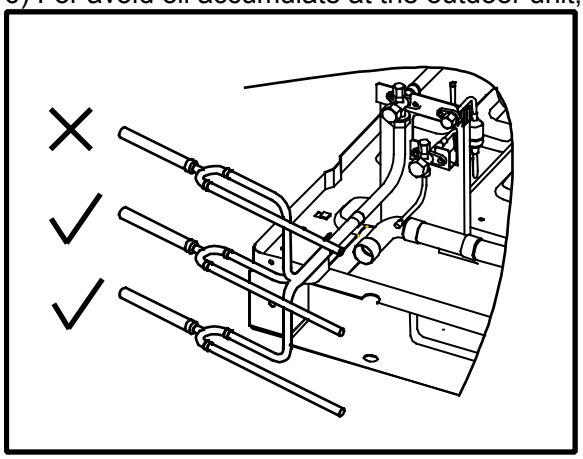

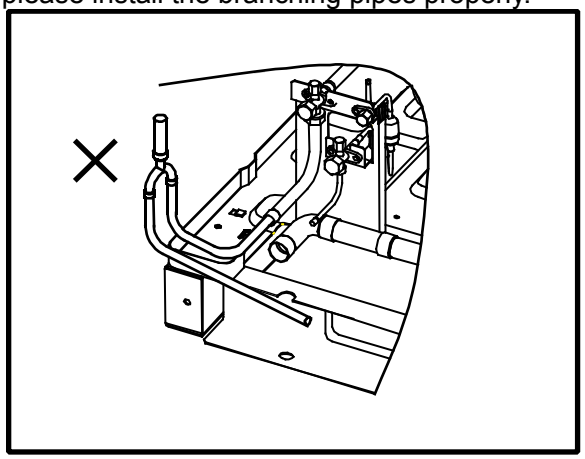

7) To ensure even diversion of refrigerant, pay attention to the distance between the branch pipe subassembly and the horizontal straight pipe.

a. Ensure that the distance between the bending point of copper pipe and the horizontal straight pipe section of

the adjacent branch pipe is larger than or equal to 0.5m.
b. Ensure that the distance between the horizontal straight pipe sections of the two adjacent branch pipes is larger than or equal to 0.5m.
c. Ensure that the distance between the branch pipe and the horizontal straight pipe section used to connect the indoor unit is larger than or equal to 0. 5m.

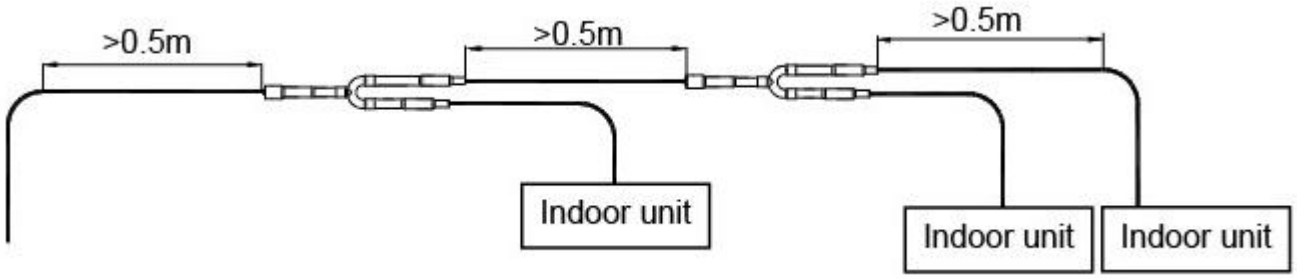

3.1.2 Storage and maintain of copper pipe

3.1.2.1 Pipe carriage and storage

1. Avoid the pipe from bending or deforming during the carriage.
2. Seal the openings of the copper pipe with end cover or adhesive tape during the storage.
3. Place the coil upright to avoid compressing deformation due to self weight.
4. Use wooden support to ensure that the copper pipe is higher than the ground, so as to make the pipe dust-proof and water-proof.
5. Take dust-proof and water-proof measures at both ends of the pipe.
6. Keep the pipes on special bracket or bench at specified place on the construction site.

3.1.2.2 Correct to seal the opening

1. There are two ways for opening sealing:
1) Sealing with cover or adhesive tape (suitable for short-term storage)
2) Sealing welding (suitable for long-term storage)
Caution: The openings of the copper pipe must be sealed at any time during the construction.
● Method of sealing with cover or adhesive tape

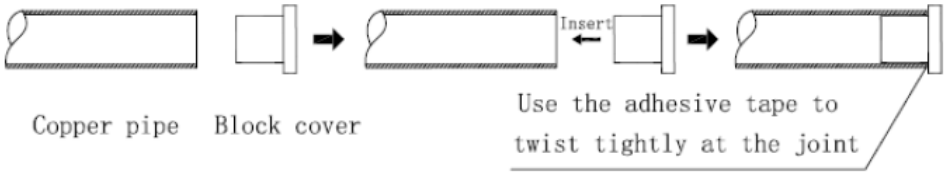

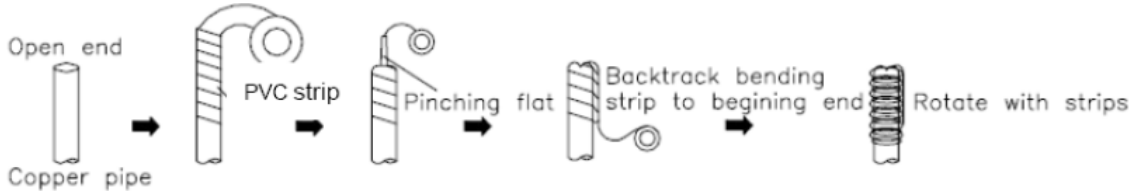

※ It is recommended to seal the openings of the pipe with both cover and adhesive tape.
● Method of sealing welding

2. Special attention:
1) When putting the copper pipe through the hole in the wall（dirt is easy to enter into the pipe）.

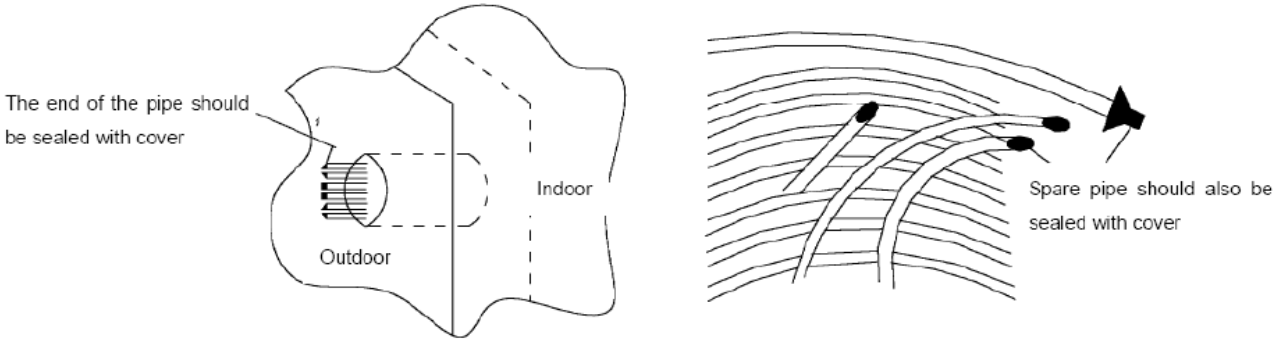

2) When the copper pipe goes outside the wall, ensure that no rain water can enter the pipe, particularly when the pipe is placed upright.

3) Before completing the pipe connection, seal the openings of the pipe with covers.
4) Place the openings of the pipe vertically or horizontally.

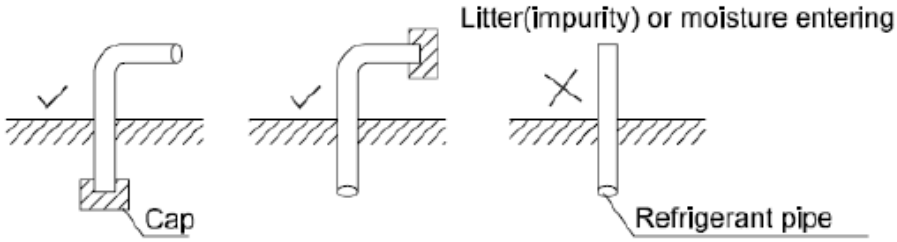

5) Before putting the pipe outside the wall, seal the opening of the pipe with a cover.

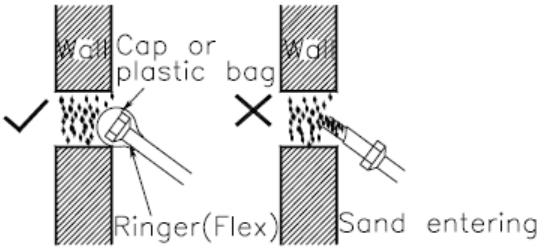

6) Do not place the pipe on the ground directly, or keep it away from ground friction.

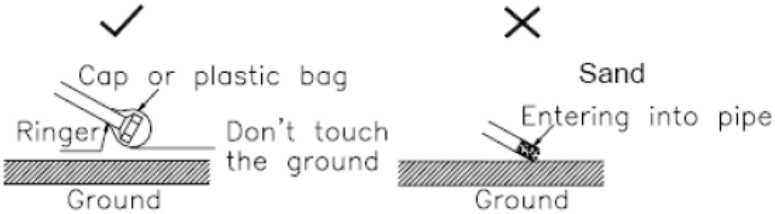

7) When conduct piping on a raining day, remember to seal the openings of the pipe first.

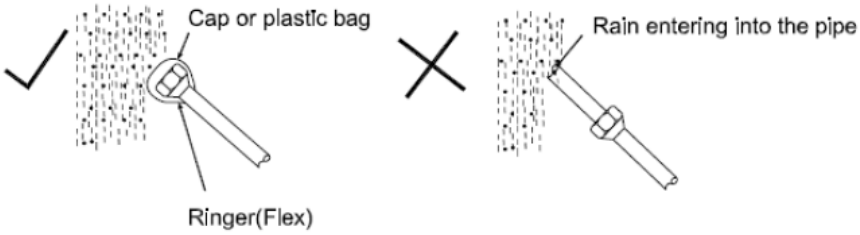

3.1.3 Processing of copper pipe

3.1.3.1 Pipe cutting

1. Tool

Use a pipe cutter instead of a saw or cutting machine to cut the pipe.

2. Correct operation procedure:

Rotate the pipe evenly and slowly, and apply force to it. Cut the pipe off while ensuring that it does not deform.

3. Risk if a saw or cutting machine is used to cut pipe:

Copper chip will enter the pipe (in this case, it will be very hard to clean up), or which may even enter the compressor or blocking the throttling unit.

3.1.3.2 Rectify opening of copper pipe

1. Purpose

Clear out the burr at the opening of the copper pipe, clean the inside of the pipe, and rectify the opening of the pipe, so as to avoid scratch at the opening to be sealed during flaring.

2. Operation procedure

1) Use a scraper to remove the inner spurs. When doing so, keep the opening of the pipe downwards to avoid copper chip from entering the pipe.
2) After the chamfering is completed, use veiling to remove the copper chip out of the pipe.
3) Ensure no scar of produced, so as to avoid the pipe from getting broken during flaring.
4) If the pipe end obviously deforms, cut the end off and then cut the pipe again.

3.1.3.3 Pipe expansion

1. Purpose: Expand the opening of the pipe so that another copper pipe can be inserted to replace direct connection and reduce welding spots.
2. Highlight: Ensure that the connection part is smooth and even; after cutting the pipe off, remove the inner spurs.
3. Operation method: Insert the expanding header of the pipe expander into the pipe to expand the pipe. After completing pipe expansion, rotate the copper pipe a small angle to rectify the straight line scratch left by the expanding header.

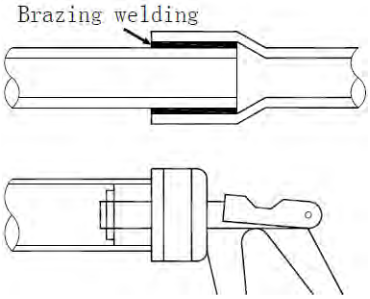

3.1.3.4 Opening bell-mouthed opening

1. Purpose: Flaring Bell-mouthed opening is used for screw thread connection.
2. Highlight:

1) Before performing the Bell-mouthed opening operation, perform fire annealing for the hard pipe.
2) Use pipe cutter to cut pipe to ensure even cross section and avoid refrigerant leakage; do not use a steel saw or metal cutting device to cut pipe, otherwise the cross section will get deformed and the copper chip will enter the pipe.
3) Remove burr carefully to avoid scar on the bell-mouthed opening, which may lead to refrigerant leakage.
4) When connecting pipes, use two spanners (one torque wrench and one non-adjustable spanner).
5) Before conducting opening bell-mouthed, install pipe onto the flaring nut.
6) Use proper torque to tighten the flaring nut.

Pipe Diameter	Torque		Legend
	(kgf-cm)	(N-cm)	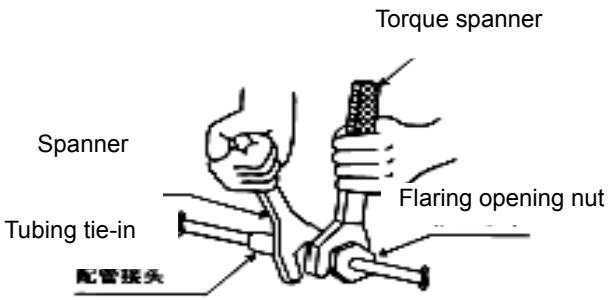
1/4" (6. 35)	144~176	1420~1720	
3/8" (9. 52)	333~407	3270~3990	
1/2" (12. 7)	504~616	4950~6030	
5/8" (15. 88)	630~770	6180~7540	
3/4" (19. 05)	990~1210	9270~11860	

Caution: When you are tightening the flaring nut with a spanner, the tightening torque will be suddenly increased at a certain point. From this point, further tighten the flaring nut to the angles shown below.

Pipe Diameter	Angle of further tightening	Recommended length of tool lever
3/8" (9. 52)	60°~90°	About 200mm
1/2" (12. 7)	30°~60°	About 250mm
5/8" (15. 88)	30°~60°	About 300mm

7) Check whether the surface of the flaring opening is damaged. The size of the flaring opening is as shown below.

Pipe Diameter	R410A	Legend
	Size of Flaring Opening (A)	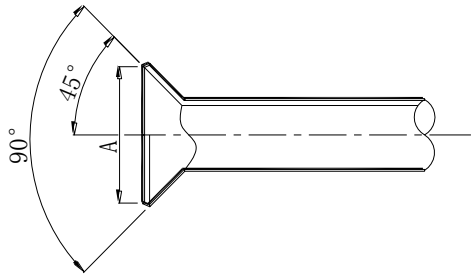
1/4" (6. 35)	8. 7~9. 1	
3/8" (9. 52)	12. 8~13. 2	
1/2" (12. 7)	16. 2~16. 6	
5/8" (15. 88)	19. 3~19. 7	
3/4" (19. 05)	23. 6~24. 0	

Cautions:

a. Apply some refrigeration oil onto the inner surface and outer surface of the flaring opening, to facilitate the connection or rotation of the flaring nut, ensure close sticking between the sealing surface and the bearing surface, and avoid pipe bending.

b. Ensure that the flaring opening is not cracked or deformed, otherwise it cannot be sealed or, after the system runs for some time, refrigerant leakage will occur.

3.1.3.5 Pipe bending

1. Method

1) Manual bending: Suitable for thin copper pipes (ф6. 35-ф12. 7).

2) Mechanical bending: Suitable in a wide range of copper pipes (ф6. 35-ф67). Spring bender, manual bender or electric bender is used.

Purpose: Reduce welding joints and required elbows, and improve engineering quality; In order to save material, no joint is needed.

2. Caution

1) When bending a copper pipe, ensure that there is no twinkle or deformation on the inner side of the pipe.

2) When using a spring bender, ensure that the bender is clean before inserting it in the copper pipe.

3) When using a spring bender, ensure that the bending angle does not exceed 90°, otherwise twinkle will appear on the inner side of the pipe, and the pipe may easily get broken.

4) Ensure that the pipe does not sink during the bending process; ensure that the cross section of the bending pipe is larger than 2/3 of the original area, otherwise it cannot be used.

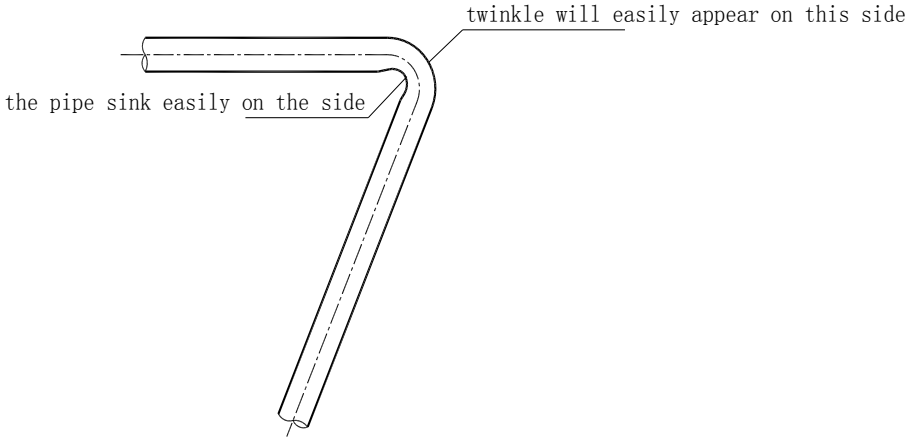

3.1.4 Brazing welding operation

3.1.4.1 Selecting refrigerant pipe

1. All pipe use shall comply with national or local standards (for example, pipe diameter, material, thickness, etc.)

2. Specification: Seamless phosphorus to oxygenate copper pipe

3. Try best to use straight pipe or coil and avoid too much brazing welding.

Note: Select the pipes according to the pipe diameters shown below (O—coil, 1/2H—straight pipe)

Outer Diameter	Material	Minimum Thickness	Outer Diameter	Material	Minimum Thickness	Outer Diameter	Material	Minimum Thickness
Φ6. 35	O	0. 8	Φ19. 0	O	1. 0	Φ38. 0	1/2H	1. 5
Φ9. 52	O	0. 8	Φ22. 0	1/2H	1. 2	Φ45. 0	1/2H	1. 5
Φ12. 7	O	0. 8	Φ25. 0	1/2H	1. 2	Φ54. 0	1/2H	1. 8
Φ15. 9	O	1. 0	Φ28. 6	1/2H	1. 3	Φ67. 0	1/2H	1. 8

3.1.4.2 Nitrogen filling for protecting copper pipe during brazing welding

1. Purpose: Avoid oxide scale from appearing on the inner wall of the copper pipe in the high temperature

2. Risks of non-protective welding:

If no sufficient nitrogen is charged into the refrigerant pipe being welded, oxides will be generated on the inner wall of the copper pipe. These oxides will block the refrigerant system, which will lead to all kinds of malfunctions such as burn-out the compressor, poor cooling efficiency.

To avoid these problems, charge nitrogen continuously into the refrigerant pipe during the brazing welding, and ensure that the nitrogen passes through the operating point until the welding is completed and the copper pipe cools down completely. The schematic diagram for nitrogen charging is shown below.

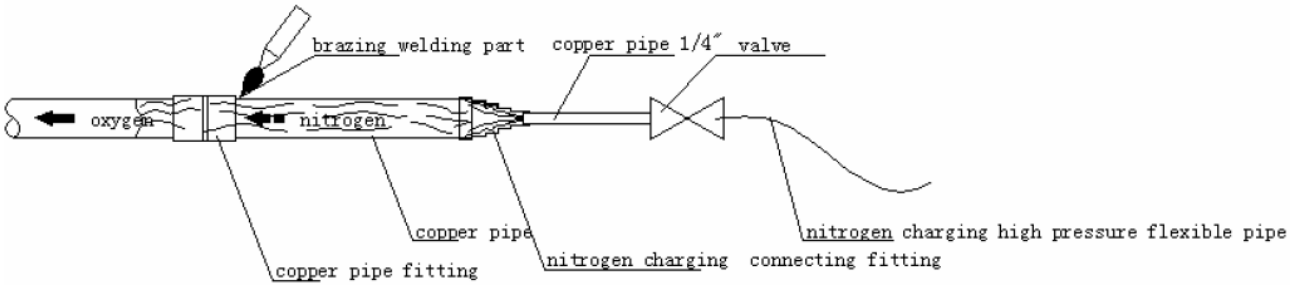

3. Making Nitrogen-Charging Pipe Joint

When welding the pipe joint, connect the nitrogen-charging joint to the pipe fittings to be welded.

The nitrogen-charging joint is shown below:

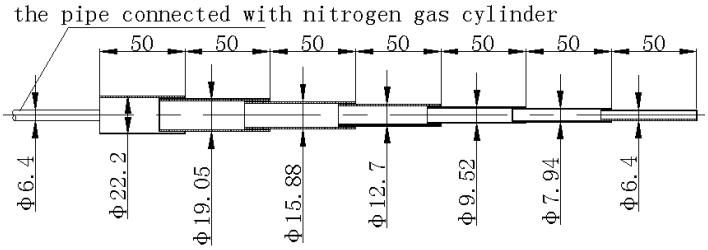

4. Cautions for Welding Pipe Fittings
1) Adopt transition pipe.
2) Charge nitrogen from the side of the short pipe, because short distance may result in perfectible nitrogen replacement effect.

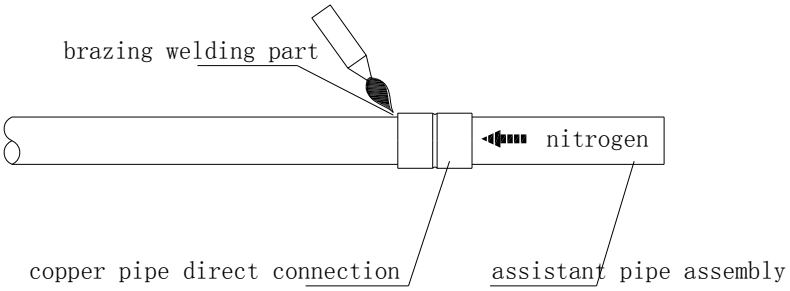

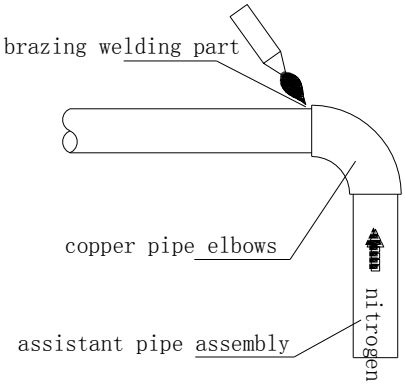

5. Standard operation of Brazing Welding

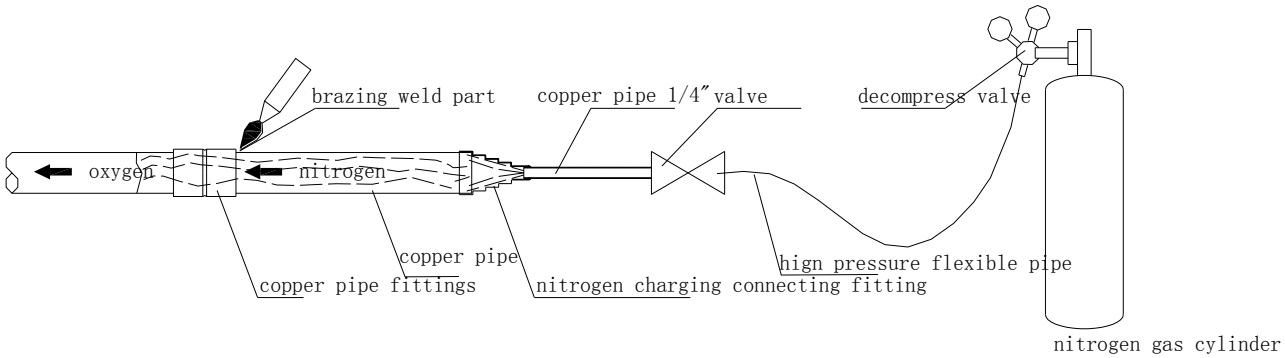

6. Highlight
1) Control the nitrogen pressure to be about 0.2-0.3kgf/cm² during the welding.
2) Ensure the gas is nitrogen; oxygen will easily leads explosion, so it is forbidden.
3) Use pressure reducing valve, and control the pressure of the charged nitrogen to be about 0.2kg/ cm².
4) Select a proper position for charging nitrogen.
5) Ensure that the nitrogen passes through the welding spots.
6) If the pipeline between the position for charging nitrogen and the welding spot is rather long, ensure that the nitrogen is charged for sufficient time so as to discharge all the air from the welding spot.
7) After completing the welding, charge the nitrogen continuously until the pipe cools down completely.
8) Try best to conduct welding downwards or horizontally and avoid face-down welding.

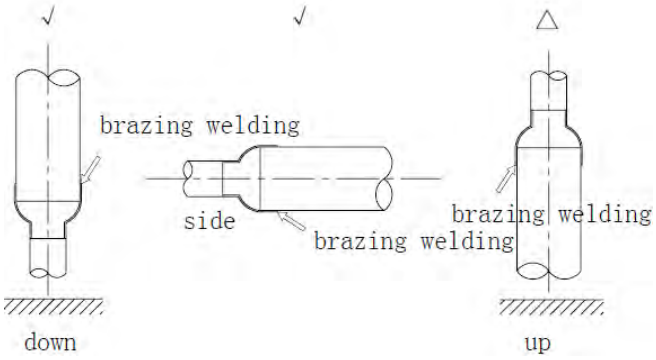

7. Cautions
1) Take fire-prevention measures when conducting welding (ensure that a fire extinguisher is available beside the operating position).
2) Avoid getting burnt.
3) Pay attention to the fit gap of the position where the pipe is inserted.
Note: The follow table shows the relation between the minimum embedded depth and gap at the copper pipe joint.

Type	Outer Diameter of Pipe (D) (mm)	Minimum Inlaid Depth (B) (mm)	Gap A—D (mm)
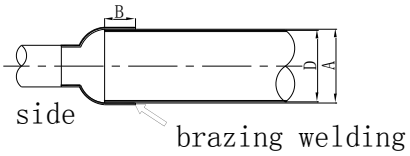	5<D<8	6	0. 05—0. 21
	8<D<12	7	
	11<D<16	8	0. 05—0. 27
	16<D<25	10	
	25<D<35	12	0. 05—0. 35
	35<D<45	14	

3.1.5 Pipe cleaning out
3.1.5.1 Flushing copper pipe
1. Function: use pressure gas to flush pipeline (raw material or welded assembly) for eliminating dust, trash and moisture. Solid impurity is hard to be washed out, so special attention shall be drawn to the protection of copper pipeline during construction.
2. Purpose
1) Eliminate oxide powder or part oxide layer in copper pipe.
2) Help to clear out dirt and humidity in pipe.
3. Risk in case of no flushing:
If the remaining solid impurity and moisture in pipeline could not be eliminated effectively, serious malfunctions shall happen, such as ice blockage, dirt blockage and compressor being jammed.
3.1.5.2 Procedure of flushing
1. Mounting pressure adjusting valve on nitrogen gas cylinder. The applied gas must be nitrogen. If adopting polytetrafluoro ethylene or carbon dioxide, there is a risk of condensation. If using oxygen, there is a risk of explosion.
2. Making use of inflation tube to connect outlet of pressure adjusting valve and inlet at liquid pipe side of outdoor unit.

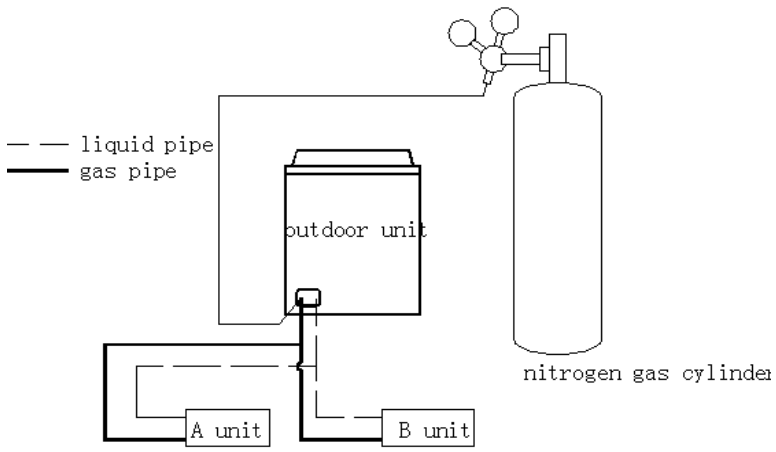

3. Use blind plug to block all connectors of liquid side copper line (including unit B) soundly, excluding indoor unit A.
4. Turn on nitrogen gas cylinder valve, and then pressurize to 5kgf/cm2 gradually through adjusting valve.

5. Check whether nitrogen has passed through the liquid pipe at the side of indoor unit A. Connector at the side of indoor unit body has been covered by tape to prevent the entering of dirt.

3.1.5.3 Detailed steps for flushing

1. Hold proper blockage material (such as block bag and white cotton) to push against the main pipe opening at the gas side of indoor unit.
2. When pressure increases and hands could not push against the opening, suddenly release pipe opening (flushing for first time).

Repeat above step1 and step 2 to re-flush dirt (flushing for multi-times)

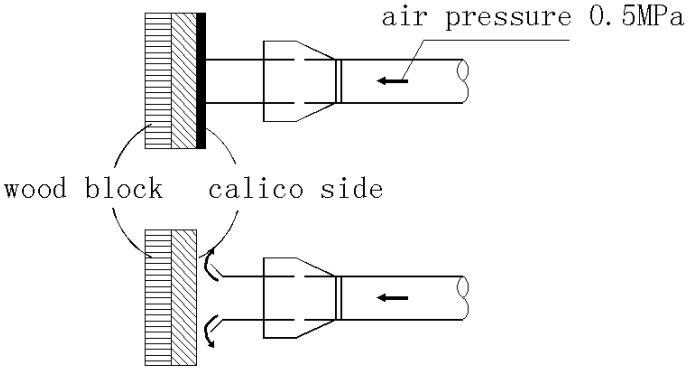

3. During flushing, place a piece of white cotton at the pipe opening for checking, and you shall find some humidity occasionally.

Way of thoroughly drying pipeline is as follows:

1) Making use of nitrogen gas to flush the inner part of pipe until no dirt and humidity.
2) Carry out vacuum drying operation (see vacuum drying of MDV refrigerant piping in detail).
3) Shut down nitrogen main valve.
4) Repeat above operations to the connected copper pipe of all indoor units.
5) Sequence of flushing: when pipeline has been connected to system, sequence of flushing is from far to near, that is, in light of principal unit, flushing from the farthest pipe opening to principal unit in turn (i.e. 1)-2)-3)-4)-5)-6)).

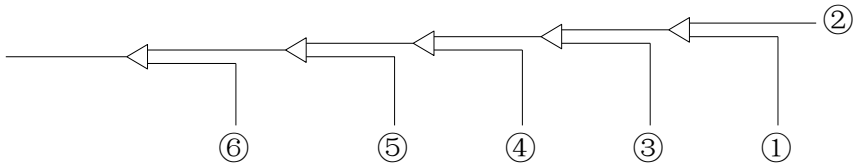

Caution: When flushing one pipe opening, block all pipe openings which are connected to this opening.

6) After finishing flushing, seal soundly all openings linked with atmosphere to prevent the entering of dust, trash and moisture.

3.1.6 Installation highlight of pipe system

1) Pipe between outdoor units must install horizontally, the mid-connecting pipe between those pipes aren't allowed downward drop.
2) All pipes between outdoor units cannot be higher than the outdoor units' outlet.

The right installation type:

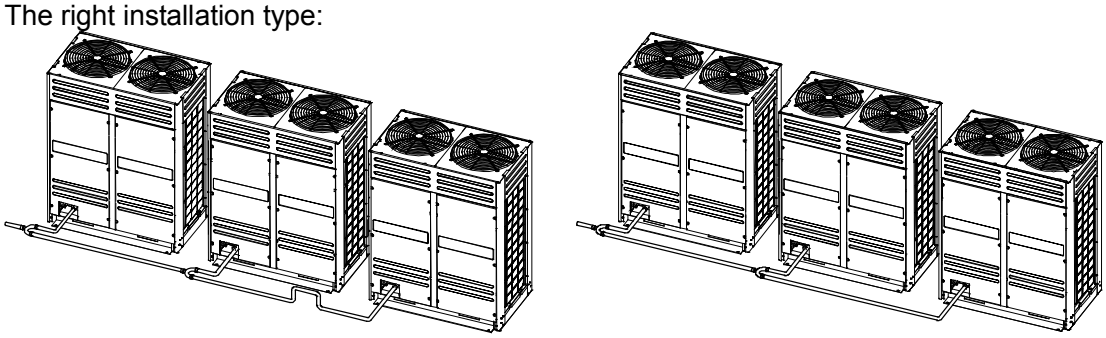

The wrong installation type:

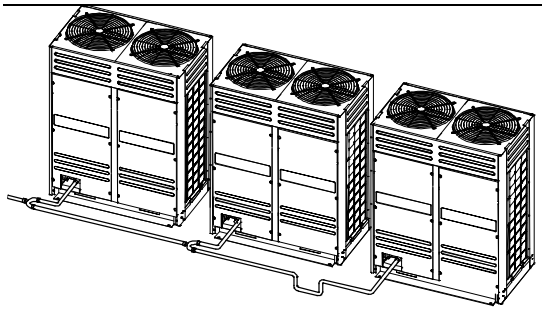

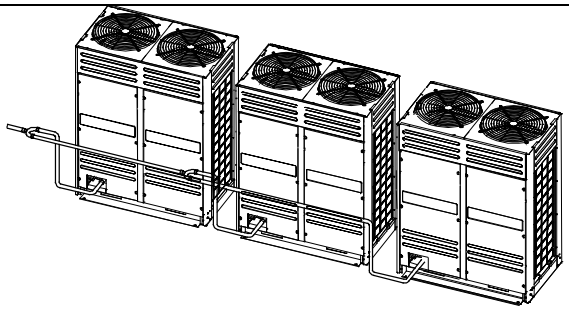

3.2. Air Tight Test

3.2.1 Purpose and operation procedure of air tightness test

3.2.1.1 Purpose

Search leak source, make sure there is no leakage in system to prevent system fault due to leakage of refrigerant.

3.2.1.2 Operation tips

Subsection detection, overall pressure-keeping, grading pressurization.

3.2.1.3 Operation procedure

1. After piping of indoor unit has been connected, weld port of high-pressure side piping.
2. Weld low-pressure side piping with connector for pressure gauge together.
3. Charge nitrogen slowly into pressure gauge connector to conduct air tightness test.

3.2.2 Operation of air tightness test

3.2.2.1 Operation procedure

1. When conducting air tightness test, make sure that gas pipe and liquid pipe are kept in full-shut status; otherwise, nitrogen might enter the circulation system of outdoor unit. Both gas valve and liquid valve need to be strengthened before pressurization d.
2. Each refrigerant system shall be slowly pressurized from the two sides of gas pipe and liquid pipe.
3. Make use of dry nitrogen as medium to conduct air tightness test. Phase-in control diagram of pressurization is as follows:

No.	Phase (phase-in pressurization)	Criteria
1	Phase 1: appear large leakage after over three minutes of pressurization with 3.0kgf/cm^2.	No pressure drop after modification
2	Phase 2: appear major leakage after over three minutes of pressurization with 15. 0kgf/cm^2.	
3	Phase 3: appear small leakage after over 24 hours of pressurization with R410A: 40.0kgf/cm^2.	

3.2.2.2 Pressure observation

1. Pressurize to regulated value and maintain 24 hours. When modifying pressure according to variation of temperature, it is qualified if pressure drop does not happen. If pressure falls, find out the leak source and modify it.
2. Modification method

When ambient temperature difference is ±1℃, the pressure difference shall be ±0.1 kgf/cm^2.

Modification formula: Real value = pressure of pressurization + (temperature of pressurization – temperature during observation) x 0.1 kgf/cm^2

You can find out whether the pressure drops or not by comparing the modification value with pressurization value.

3. General ways for searching leak source

Conduct detection through three phases; find out leak source when pressure drop happens.

1) Audition detection-----hear large leakage sound
2) Hand-touching detection-----place hand at the joint of pipeline to feel whether there is leakage
3) Soap water detection-----bubbles shall burst out from leak source.
4) Detection by use of halogen leak detector

Using halogen leak detector when finding out pressure drop but not finding the leak source.

a. Keep nitrogen at 3.0kgf/cm^2.
b. Supplement refrigerant to 5.0kgf/cm^2.
c. Use halogen leak detector, methane leak detector and electric leak detector for detection.
d. If the leak source still could not be found, continuously pressurize to 40.0kgf/cm^2 (R410A) and then detect again.

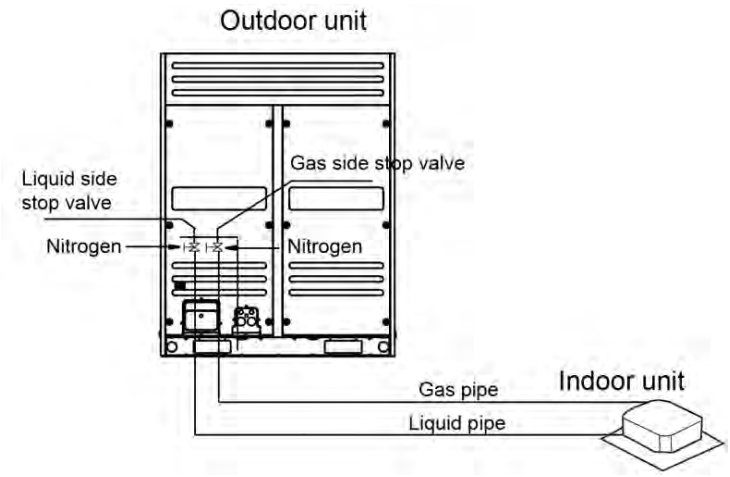

4. Caution
1) The air tightness test is conducted by pressurize nitrogen (R410A system: 40kgf/cm^2).
2) It is not allowed to adopt oxide, flammable gas and toxic gas to conduct air tightness test.
3) Before pressure-keeping reading, let it rest for several minutes till pressure is stable, to record temperature, pressure value for future modification.
4) After pressure-keeping is over, release system pressure to 5~8 kgf/cm^2 and then conduct pressure-keeping and storage.
5) If pipeline is too long, conduct phase-in detection.
a. Inner side of pipeline
b. Inner side of pipeline + upright
c. Inner side of pipeline + upright+ outer side of pipeline

3.3. Vacuum Drying

3.3.1 Purpose and highlights of vacuum drying

3.3.1.1 Purpose of vacuum drying

1. Dehumidify the system to prevent ice-blockage and copperizing. Ice-blockage shall cause abnormal operation, while copperizing shall damage compressor.
2. Eliminating the non-condensable gas of system to prevent oxidizing components, system pressure fluctuation, and bad heat exchanging during the system operation.
3. Detect leak source from reverse rotate.

3.3.1.2 Selection of vacuum pump

1. The limit of vacuum degree is below -756mmHg.
2. The discharge of vacuum pump is over 4L/s.
3. The precision of vacuum pump is over 0. 02mmHg.

Highlights of R410A system:

After the vacuum process of R410A refrigerant circulation is over, vacuum pump stops running and the lubricant in vacuum pump shall flow back to air conditioning system, for the inner of pump soft pipe is in vacuum status. In addition, same situation shall happen if vacuum pump suddenly stops during operation. At this moment, different oils will mix, which induce the refrigerant circulating system to malfunction, so it is recommended to use one-way valve to prevent reverse flow of oil in vacuum pump.

3.3.1.3 Vacuum drying for pipe

Vacuum drying: Use vacuum pump to make the moisture (liquid) in pipeline change into steam, which will eliminate the moist of the pipeline and keep drying of pipe inner. Under atmospheric pressure, water's boiling point (steam temperature) is 100°C, while its boiling point will decline when using vacuum pump reduce the pipeline pressure to vacuum. When the boiling point declines under outdoor temperature, moisture in pipe shall be evaporated.

Boiling Point of Water (℃)	Air Pressure (mmHg)	Vacuum Degree (mmHg)	Boiling Point of Water (℃)	Air Pressure (mmHg)	Vacuum Degree (mmHg)
40	55	-705	17. 8	15	-745
30	36	-724	15	13	-747
26. 7	25	-735	11. 7	10	-750
24. 4	23	-737	7. 2	8	-752
22. 2	20	-740	0	5	-755
20. 6	18	-742			

3.3.2 Operation procedure for vacuum drying

3.3.2.1 Methods of vacuum drying

By different construction environment, there are two kinds of vacuum drying ways: ordinary vacuum drying and special vacuum drying.

3.3.2.1.1 Ordinary vacuum drying

1) Firstly, connect the pressure gauge to the infusing mouth of gas pipe and liquid pipe, keep vacuum pump running for above 2 hours, and it is quality that vacuum degree of vacuum pump is below -755mmHg.
2) If the vacuum degree of vacuum pump could not be below -755mmHg after 2 hours of drying, system will continue drying for one hour.
3) If the vacuum degree of vacuum pump could not be below -755mmHg after 3 hours of drying, please check the system leakage source.
4) Vacuum placement test: when the vacuum degree reaches -755mmH, keep rest for 1 hour. If the indicator of vacuum gauge does not go up, it is qualified. If going up, it indicates that there is moisture and leak source.
5) Vacuum drying shall be conduct from liquid pipe and gas pipe simultaneously. There are a lot of functional parts like valves, which could shut down the gas flow midway.

3.3.2.1.2 Special vacuum drying

This kind of vacuum drying method shall be adopted when:
1) Finding moisture during flushing refrigerant pipe.
2) Conducting construction on rainy day, because rain water might penetrated into pipeline.
3) Construction period is long, and rain water might penetrated into pipeline.
4) Rain water might penetrate into pipeline during construction.
Procedures of special vacuum drying are as follows:
a. The first vacuum drying 2 hours.
b. The second vacuum damage, filling nitrogen to 0.5Kgf/cm^2.
Because nitrogen is dry gas, vacuum damage could achieve the effect of vacuum drying, but this method could not achieve drying thoroughly when there is too much moisture. Therefore, special attention shall be drawn to prevent the entering of water and the formation of condensate water.
c. The second vacuum drying 1 hour.
It is qualified when vacuum degree is under -755mmHg; if the vacuum degree is still above -755mmHg within 2 hours drying, please repeat the procedures of “vacuum damage---vacuum drying”.
d. Vacuum placement test: when the vacuum degree reaches -755mmH, keep rest for 1 hour. If the indicator of vacuum gauge does not go up, it is qualified. If going up, it indicates that there is moisture and leak source.

3.4. Recharge Refrigerant

3.4.1 Operation procedure for recharging refrigerant

3.4.1.1 Operation procedure

Calculate the required refrigerant volume by the length of liquid pipe → recharging refrigerant.
※The refrigerant volume from factory does not include the recharged amount of the pipeline extending.

3.4.1.2 Detailed steps for recharging refrigerant

1. Make sure vacuum drying is qualified before recharging refrigerant.
2. Calculate the required refrigerant volume by the diameter and the length of liquid pipe.
3. Use electronic scale or fluid infusion apparatus to weight the recharged refrigerant volume.
4. Use soft pipe to connect refrigerant cylinder, pressure gauge, and examine valve of outdoor unit. And recharge with liquid mode. Before recharging, eliminate the air in the soft pipe and pressure gauge's pipe.
5. After finishing the recharging, by the gas leak detector or soap water, to detect whether there is refrigerant leakage in expansion part of indoor and outdoor units.
6. Write the recharged refrigerant volume in the indicating plate of outdoor unit.

Caution

1) The recharged refrigerant volume must be calculated according to the formula in the technical reference of outdoor unit. It isn't allowed to calculate by running current, pressure and temperature. Because current and pressure is changeable due to the difference of temperature and length of pipeline.
2) In the cold ambient, use warm water and hot wind to warm up refrigerant storage cylinder, and don't allow heating up directly by flame.

3.4.1.3 Recharging R410A refrigerant

If R410A refrigerant is adopted, the tool shall be different. Confirm the following items before Recharged:
1) The different vacuum pump with one-way valve.
2) The different pressure gauge: the nut of connector and pressure scale are different.
3) The different recharging soft pipe and connector.
4) The charging method is different. Recharge into the outdoor unit with liquid phase.
5) The different leak detector.

3.4.2 Calculating the recharged refrigerant volume

Calculate the recharged refrigerant volume by the length and diameter of liquid pipe of indoor units

R410A			
Diameter of Liquid Pipe	Equivalent Refrigerant for Pipe Length of 1m (kg/m)	Diameter of Liquid Pipe	Equivalent Refrigerant for Pipe Length of 1m (kg/m)
Φ6. 4	0.023	Φ19. 1	0.270
Φ9. 5	0.060	Φ22. 2	0.380
Φ12. 7	0.120	Φ25. 4	0.520
Φ15. 9	0.170	Φ28. 6	0.680

Calculating formula (R410A):

The recharged volume: R (Kg) = (L1×0. 023 kg/m) + (L2×0. 060 kg/m) + (L3×0. 120 kg/m) + (L4×0.180 kg/m) + (L5×0. 270 kg/m) + (L6×0. 380 kg/m) + (L7×0. 520kg/m) + (L8×0. 680kg/m)
L1: Actual total length of Φ6.35 liquid pipe (m); L2: Actual total length of Φ9.53 liquid pipe (m);
L3: Actual total length of Φ12.7 liquid pipe (m); L4: Actual total length of Φ15.9 liquid pipe (m);
L5: Actual total length of Φ19.1 liquid pipe (m); L6: Actual total length of Φ22.2 liquid pipe (m);
L7: Actual total length of Φ25.4 liquid pipe (m); L8: Actual total length of Φ28.6 liquid pipe (m)

4. Drainage Pipe Engineering

4.1 Installation Highlights of Drainage Pipe

4.1.1 Installation principle of drainage pipe:

1) Slope; 2) reasonable pipe diameter; 3) nearby discharge

4.1.2 Installation highlights of drainage pipe:

1. Before installing condensate water pipeline, determine its route and elevation to avoid intersection with other pipelines and ensure slope is smooth and straight.
2. Make sure that the two horizontal fluid pipes shall avoid encountering, and preventing flow backwards and drainage difficulty.

a. Correct connection:

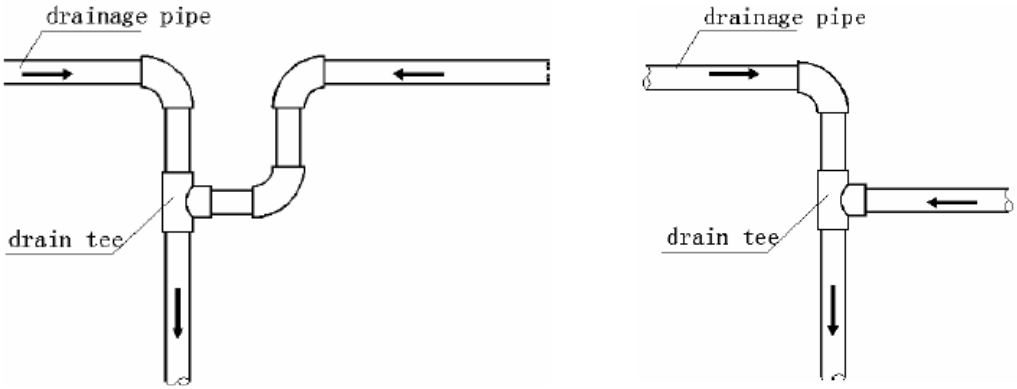

b. Incorrect connection:

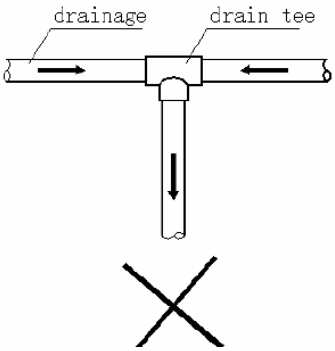

Advantages of correct connection:
1. Do not cause flow backwards of one pipe.
2. The slope of two pipes can be regulated separately.

Disadvantages of incorrect connection:
1. Interfere drainage.
2. The side of branch pipe with large quantity of fluid volume will flow to the side with small quantity, thus leading to the water backwards of branch pipe with small quantity.
3. Suspender gap:
In general, the horizontal gap is 0.8m-1m and the vertical gap is 1.5m-2.0m. Each vertical pipe shall be equipped with not less than two suspenders. Overlarge suspender gap for horizontal pipe shall create bending, thus leading to air resistance.
4. The highest point of drainage pipe shall be designed with air hole to ensure that condensate water could be discharged smoothly. The outlet air hole shall face down to prevent dirt entering pipe.
5. After finishing connection, conduct water passing test and overflowing water test to pipelines to check the smoothness of drainage and leakage of pipeline system.
6. Use specific glue to adhesive the seam of thermal insulation materials, and then bind with rubber or plastics adhesive tape. The width of the adhesive tape shall not be less than 50mm to ensure fastness and prevent condensation.
7. The drainage pipe of air conditioner shall be installed separately with other waste pipe, rainwater pipe and other drainage pipe in building.
8. The slope of drainage pipe shall be kept above 1/100.

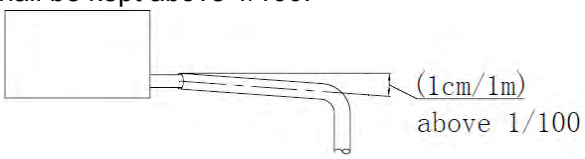

9. In case 1/100 slope can not need, consider to use larger-sized pipe and use its diameter to create slope.
10. Conflux towards horizontal pipe shall come from upside as much as possible. If it comes from transverse route, reflux is easy to be created.
11. The end of drainage pipe shall not contact with ground directly.

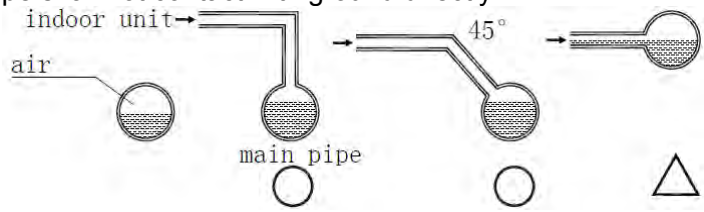

4.1.3 Caution
1. The drainage pipe diameter shall meet the draining requirement of indoor unit.
2. The outlet air vent cannot be installed nearby the lifting pump of the indoor unit.

3. Check whether condensate water pump can be started up and shut down normally by infusing water into the water-containing plate of indoor unit and powering on.
4. All joints shall be firm (particularly PVC pipe).
5. The drainage pipe is not allowed to turn to adverse slope, horizontal, and bending.
6. Dimension of drainage pipe shall be not less than the connecting mouth size of drain piping to indoor unit.
7. Work out thermal insulation of drainage pipe, otherwise it is easy to produce condensation. Thermal insulation processing shall be continued to the connecting part of indoor unit.
8. Indoor units with different draining pattern shall not share the same concentrated drainage pipe.
9. Discharge of condensate water cannot influence normal life and working of other people.
10. As for long drainage pipe, hanging bolt shall be used to ensure 1/100 slope without bending PVC pipe.

※ The support gap of horizontal pipe is 0.8-1.0mm. If the gap is too large, it shall produce bending and air resistance, while air resistance could seriously influence smoothness of water flow to cause abnormal water level. As shown in following figure:

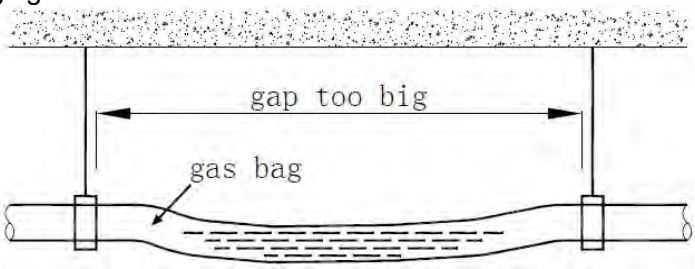

4.2 Water Storing Elbow of Drainage Pipe

4.2.1 To indoor unit with large negative pressure at the outlet of water-containing plate, the drainage pipe must be equipped with water storing elbow.

Function of water storing elbow:

When indoor unit is in motion, prevent generating negative pressure to cause drainage difficulty or blow water out of the air outlet.

Installation of water storing elbow:

1. Install water storing elbow as shown in following figure: H shall be above 50mm.
2. Install one water storing elbow for each unit.
3. When installation, consider it shall be convenient in future clean.

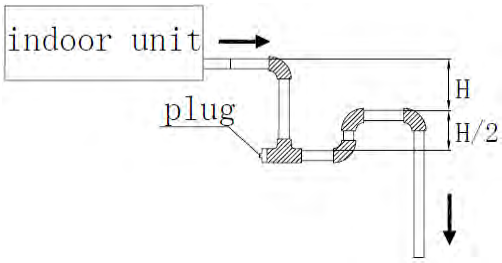

4.3 Concentrated Drainage Pipe

4.3.1 Pipeline diameter of concentrated drainage pipe

Select drainage pipe diameter according to indoor unit's combined flow volume.

E.g. If one 1HP unit with 2L/h discharging condensate water, the calculation of the combined flow volume of three 2HP units and two 1.5HP units is: 2HP x 2L/h x 3 + 1.5HP x 2L/h x 2 =18L

4.3.2 Relation between horizontal pipeline diameter and permitted displacement of condensate water

PVC piping	Inner diameter of piping(reference value: mm)	Inner diameter of piping(mm)	Permitted displacement(1/h)		Remark
			Slope 1:50	Slope 1:100	
PVC25	19	20	39	27	(Reference value)could not used for confluence pipe
PVC32	27	25	70	50	
PVC40	34	31	125	88	Could be used for confluence pipe
PVC50	44	40	247	175	
PVC63	56	51	473	334	

Attention: through converge point need use PVC40 or larger pipe.

4.3.3 Relation between vertical pipeline diameter and displacement of condensate water

PVC piping	Inner diameter of piping(reference value: mm)	Inner diameter of piping(mm)	Permitted displacement(1/h)	Remark
PVC25	19	20	220	(Reference value)could not used for confluence pipe
PVC32	27	25	410	
PVC40	34	31	730	Could be used for confluence pipe
PVC50	44	40	1440	
PVC63	56	51	2760	
PVC75	66	67	5710	
PVC90	79	77	8280	

Attention: through converge point need use PVC40 or larger pipe.

4.3.4 Operation process of concentrated drainage

Install indoor unit → connect drainage pipe → water passing test and overflowing water test → thermal insulation of drainage pipe

Caution:

1) Increase drainage point as much as possible and reduce quantity of connected indoor units, to ensure horizontal main drainage pipe not be too long.

2) Units with drainage pump and natural drainage shall converge to different drainage system separately.

3) Add two elbows at air outlet, and make sure its mouth faces down to prevent dirt and so on dropping into pipe to create blockage.

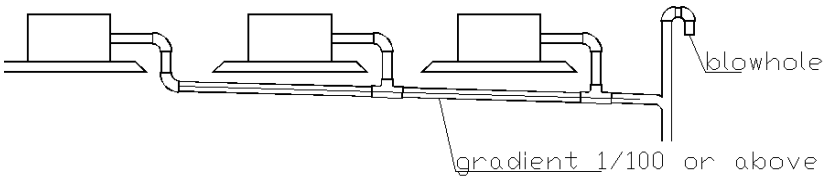

4.4 Lifting of Drainage Pipe (for the Unit with Lift Pump)

4.4.1 Installation of lift pipe

1. When connecting drainage pipe with indoor unit, use pipe clamp shipped with unit to fix. Glue splicing is not permitted for ensuring convenience in repairing.

2. To ensure 1/100 slope, total lift height of drainage pipe (H) shall depend on indoor unit's pump, and do not set vent pipe on the lifting pipe section. After lifting vertically, immediately place down inclined, otherwise it will cause error operation of switch at water pump. The connecting method is shown as follows:

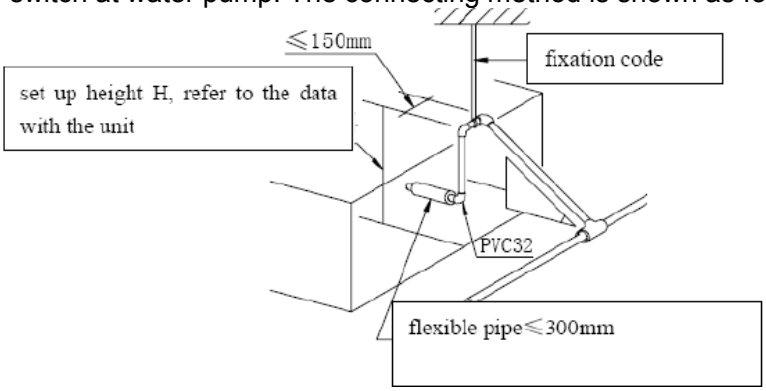

Note: Air outlet could not be installed on the lifting part; otherwise water shall be discharged to ceiling or could not be discharged.

4.5 Overflowing Water Test and Water Passing Test

4.5.1 Overflowing water test

After finishing the construction of drainage pipe system, fill the pipe with water and keep it for 24 hours to check whether there is leakage at joint section.

4.5.2 Water passing test

1. Natural drainage mode

Infuse water-containing plate with above 600ml water through check port slowly, and observe transparent hard pipe at drainage outlet to confirm whether it can discharge water.

2. Pump drainage mode

1) Remove plug of water level switch, remove water-finding cover and slowly infuse water-containing plate with about 2000ml water through water-finding port to prevent touching the motor of drainage pump.

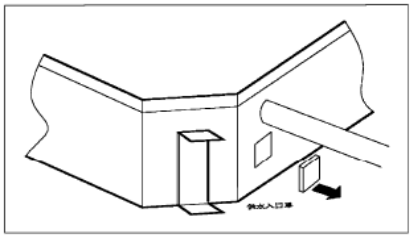

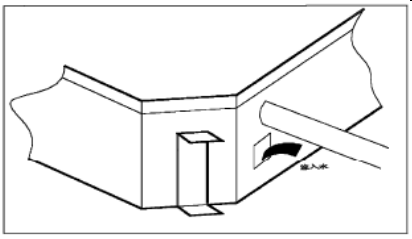

2) Power on and let the air conditioner operate for cooling. Check operation status of drainage pump, and then turn on water level switch, check operation sound of pump and observe transparent hard pipe at drainage outlet to confirm whether it can discharge water. (In light of the length of drainage pipe, water shall be discharged after delaying about 1 minute)
3) Stop the operation of air conditioner, turn down power supply and put water-finding cover to the original place.
a. After stopping the operation of air conditioner, check whether there is something abnormal 3 minutes later. If drainage pipe have not been distributed properly, over back-flow water shall cause the flashing of alarm indicator at remote-controlled receiving board and even water shall run over the water-containing plate.
b. Continuously add water until reaching alarm water level, check whether the drainage pump could discharge water at once. If water level does not decline under warning water level 3 minutes later, it shall cause shutdown of unit. When this situation happens, normal startup shall be carried out by turning down power supply and eliminating accumulated water.
Note: Drain plug at the main water-containing plate is used for eliminating accumulated water in water-containing plate when maintaining air conditioner fault. During normal operation, the plug shall be filled in to prevent leakage.

5. Duct Engineering

5.1 Fabrication of Duct

1. The material, specification, performance and thickness of metal duct should be in accordance with the relevant regulations of present National Products Standard. The thickness of steel sheet or galvanized steel sheet should not be less than the regulation in table below:
Thickness of steel sheet duct (mm)

Diameter(D) or edge length (b) of duct	Circular duct	Rectangle duct	
		Middle/low pressure system	High pressure system
D(b)≤320	0.5	0.5	0.75
320＜D(b)≤450	0.6	0.6	0.75
450＜D(b)≤630	0.75	0.6	0.75
630＜D(b)≤1000	0.75	0.75	1
1000＜D(b)≤1250	1	1	1

2. The material, specification, performance and thickness of non-metal duct should be in compliance with design and regulations of present National Products Standard.
3. The body, frame, fixing material and sealed cushion of fire-proof air duct should be made of non-combustible materials. Its fire resistance rating should be in accordance with the design requirement.
4. The sheathing of composite duct should be made of non-combustible materials. Inner insulation material should be no burning or burning retardant with rating B1, and no harm to people's body.
5. The permitting deviation to outer diameter or long edge of duct: when no more than 300mm, it is 2mm; when more than 300mm, it is 3mm. The permitting deviation of pipe end flatness is 2mm.
Discrepancy between two diagonal lines of rectangle duct shall not be more than 3mm. Discrepancy between two diameters of any cross-cut circular flange shall not be more than 2mm.

5.2 Connection of Duct

1. Connection of metal duct
1) The seam of duct board splice should be stagger and cross-seam is not allowed.
2) Specification of metal duct flange shall not be less than the data as shown in table below.
Specification to flange and bolt of circular metal duct (mm)

Diameter of duct(D)	Specification of flange		Specification of bolt
	Flat steel	Angle steel	
D≤140	20×4	-	M6
140＜D≤280	25×4	-	
280＜D≤630	-	25×3	
630＜D≤1250	-	30×4	M8
1250＜D≤2000	-	40×4	

Specification to flange and bolt of rectangle metal duct (mm)

Dimension of long edge of duct(b)	Specification of flange(angle steel)	Specification of bolt
b≤630	25×3	M6
630＜b≤1500	30×3	M8
1500＜b≤2500	40×4	
2500＜b≤4000	50×5	M10

3) Diameter of bolt and rivet to duct flange for middle/low pressure system should be no more than 150mm. As for duct of high pressure system, it should be no more than 100mm.
4) Four angles of rectangle duct flange should be designed with screw hole.
5) When improving the strength of duct flange position by adopting reinforcement method, the applied condition corresponding to flange specification could be extended.
2. Connection of nonmetallic duct
Specification of flange should be in accordance with standard, gap of bolt hole should be no more than 120m. Four angles of rectangle duct flange should be designed with screw hole.
3. Strengthening of metal duct
When edge length of rectangle duct is more than 630mm, edge length of insulation duct is more than 800mm and length of pipe section is more than 1250mm, or single-edge level area of low pressure duct is more than 1.2 square meters and single-edge level area of high/middle pressure duct is more than 1.0 square meter, strengthening measures should be conducted.
4. Strengthening of nonmetallic duct
When diameter or edge length of HPVC duct is more than 500mm, the joint section of duct and flange should be equipped with strengthening board and the gap should not be more than 450mm.

5.3 Connecting Highlights of Duct

1. Supporting, hanging and mounting bracket should be made of angle steel. Position of expansion bolt should be correct, firm and reliable. The buried part could not be painted and oil pollution should be eliminated. Gap should be in accordance with regulation below:
1) If duct is installed horizontally, gap should be no more than 4m when diameter or edge length is less than or equal to 400mm, while the gap should be no more than 3m when diameter or edge length is more than 400mm.
2) If duct is installed vertically, gap should be no more than 4m and make sure there is at least 2 fixed points on single straight pipe.
2. Supporting, hanging and mounting bracket could not be installed at air opening, valve, checking door and automatically controlled device, and distance to air opening or plugged tube shall not be less than 200mm.
3. Hanging bracket should not be hung above flange.
4. Thickness of flange gasket should be 3-5mm. Gasket should be flat on flange and inserting to pipe is not allowed. Set up fixed points at proper place for hanging pipe to prevent vibration.
5. Vertical splice seam of duct should be stagger. Make sure there is no vertical seam at the bottom of duct installed horizontally. As for the installation of flexible short duct, keep proper tightness and no distortion.
6. All metal parts (including supporting, hanging and mounting bracket) on pipeline system engineering should be conducted anti-corrosion treatment.

5.4 Installation of Assembly

1. The regulating device of duct should be installed in place where is easy to operate, flexible and reliable.
2. The air port should be installed firmly and air pipe should be connected tightly. Frame should be tightly contact with decorate of building. The appearance should be smooth and flat, and regulation is flexible.
3. If air port is installed horizontally, deviation of levelness is no more than 3/1000. If air port is installed vertically, deviation of perpendicular should be no more than 2/1000.
4. The same air port in same room should be installed at the same height, and put in order

6. Heat Insulation Engineering

The insulation of refrigerating equipment and pipe is carried out through general insulation method, which binding the equipment and pipe with solid multi-hole insulation material and exploiting proper wet-proof and protection measures, called insulation structure. The form of insulation structure shall be different in light of different insulation materials. This is a traditional insulation method which is adopted very early. Although its insulation performance is general, but it is simply in structure, convenient in construction and cheap in price, so that it is widely used in refrigeration engineering.

6.1 Insulation of Refrigerant Piping

6.1.1 Operational procedure of refrigerant piping insulation

Construction of refrigerant pipe → insulation (excluding connecting section) → test for air sealing → connecting section insulation

Connecting section: for instance, insulation construction just could be carried out after air tightness test at welding area, opening expending area and flange joint is successful.

6.1.2 Purpose of refrigerant piping insulation

1. During operation, temperature of gas pipe and liquid pipe shall be over-heating or over-cooling extremely. Therefore, it is necessary to carry out insulation; otherwise it shall reduce the performance of unit and burn compressor.
2. Gas pipe temperature is very low during cooling. If insulation is not enough, it shall form dew and cause leakage.
3. Temperature of outlet pipe (gas pipe) is very high (generally 50-100℃) during heating. Touching due to carelessness shall cause hurt, so it is necessary to take insulation measures to avoid getting hurt.

6.1.3 Selection of insulation materials for refrigerant piping

Adopt hole-closed foam insulation materials with level B1of burning retardant and over 120℃ of constant burning performance.

6.1.4 Thickness of insulation layer

1. When outer diameter of copper pipe (d) is less than or equal to 12.7mm, the thickness of insulation layer (δ) shall be above 15mm.

When outer diameter of copper pipe (d) is more than or equal to 15.88mm, the thickness of insulation layer (δ) shall be above 20mm.

2. In hot and wet environment, the above recommended value shall be increased one time.

Note: The outdoor pipeline shall be protected by metal case to proof sunshine, storm and air erosion, and prevent damage of external force or man-made destroy.

6.1.5 Installation and highlights of insulation construction

1. Example of wrong operation: Gas pipe and liquid pipe are carried out insulation together; causing the operation effect of air conditioner is bad.
2. Example of correct operation:

a. Gas pipe and liquid pipe are carried out heat insulation separately.

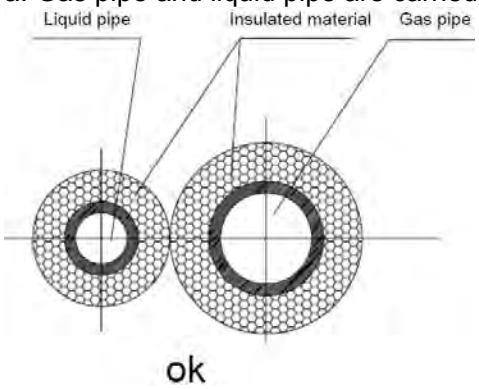

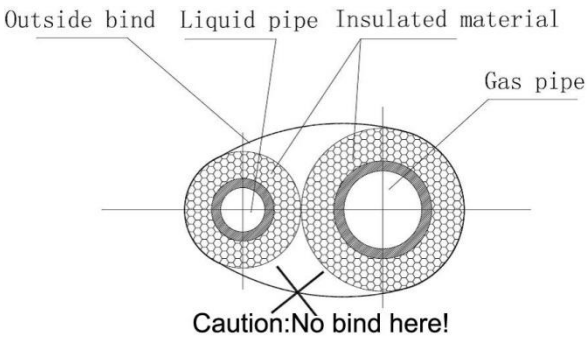

Note: After gas pipe and liquid pipe are carried out heat insulation separately, bind with tape. If it is bound over tightly, the spliced insulation joint shall be damaged.

b. The surrounding of pipe connecting section shall be carried out insulation entirely.

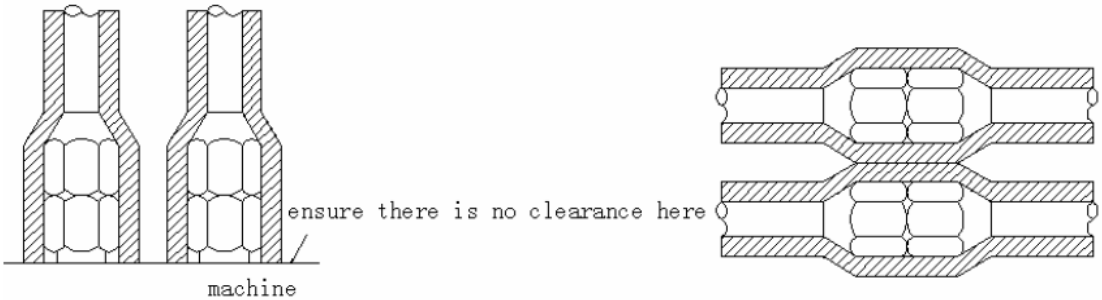

Highlights:

1. No gap in joint of insulation materials.
2. If the joint of insulation materials is linked tardily and tape is bound over tightly, shrinkage and leakage shall be produced easily to create phenomena of dew-drop. The over-tightened tape shall edge out air in material, leading to decrease the insulation effect at this part; meanwhile tape shall be easily aged and drop down.
3. In indoor shield space, it is no necessary to bind belting, so as to avoid influencing insulation effect.

Correct repairing method for insulation cotton: (see the figure below)

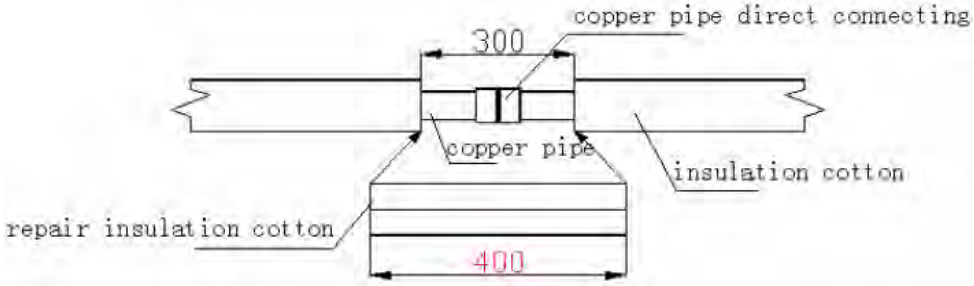

Firstly cut out the material longer than gap, expend the two ends and embed the insulated cotton, at last, paste joint with glue.

Highlights of insulation repairing:

1. Repaired length of insulation (insulation tube with filled gap) shall be 5-10cm longer than the length of gap under natural status.
2. Sliver the cut of insulation to be repaired and cross-section shall be even.
3. Insert gap with insulation for repairing and cross-section shall be pressed tightly.
4. All cross-section and cut need to be pasted with glue.
5. Finally, bind the seam with rubber/plastic tape.
6. Prohibit conducting insulation by using binder fabric in concealed section, so as to avoid influencing insulation effect.

6.2 Insulation of Condensate Water Pipe

6.2.1 Insulation of condensate water pipe

1. Select rubber/plastic tube with burning retardant of rating B1.
2. Thickness of insulation layer is usually above 10mm.
3. The insulation material at water outlet of unit body should be pasted with glue on the unit body, so as to avoid dewing and dripping.
4. Pipe installed in wall shall not be conduct insulation.
5. Use specific glue to paste the seam of insulation material, and then bind with cloth tape. The width of tape shall not be less than 5cm. Make sure it is firm and avoid dewing.

6.3 Insulation of Duct

I. Insulation of duct

1) Insulation of duct parts and equipment should be conducted after confirming that the leakage test and quality of duct is qualified.
2) Usually making use of centrifugal glass cotton, rubber/plastic material or other late-model insulation duct to conduct insulation.
3. Insulation layer should be even and tight. Crack, gap and other defects are not allowed.
4. The supporting, hanging and mounting bracket of duct should be set up to the outside of insulation layer, and insert bed timber between bracket and duct.
5. Thickness of insulation layer

1) As for the inlet and outlet duct installed in room free of air conditioner, the thickness of insulation layer should be above 40mm when adopting centrifugal glass cotton for insulation.
2) As for the inlet and outlet duct installed in room with air conditioner, the thickness of insulation layer should be above 25mm when adopting centrifugal glass cotton for insulation.
3) When adopting rubber/plastic material and other materials, the thickness of insulation layer should be come out in accordance with design requirement or calculation.

7. Electrical Engineering

7.1 Wiring terminals instruction

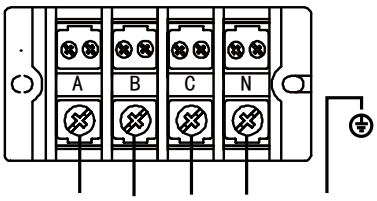

Three-phase power supply

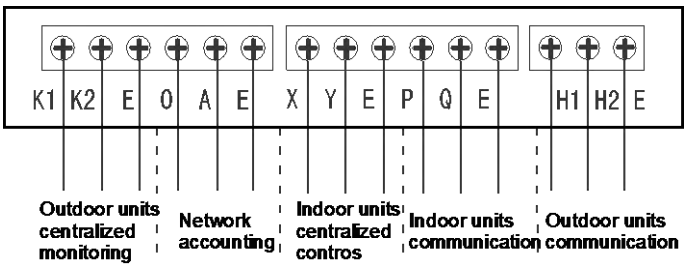

7.2 Power supply wiring installation

7.2.1 Outdoor unit power supply wiring

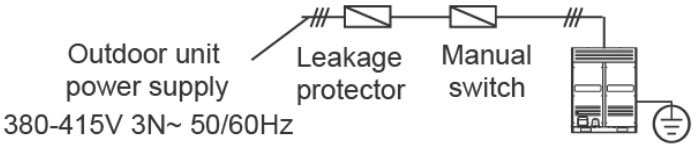

7.2.2 Indoor unit power supply wiring

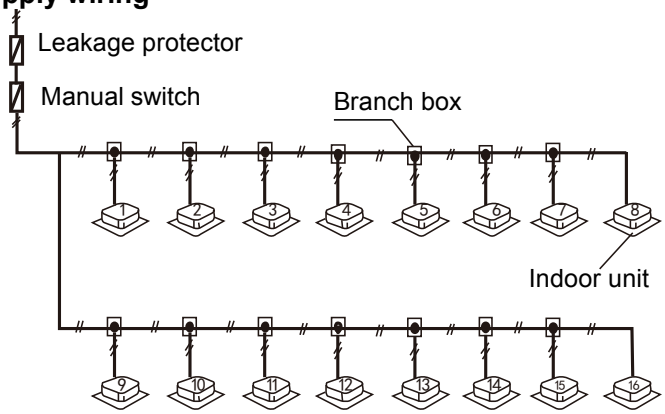

Note:

- Set refrigerant piping system, signal wires between indoor units and signal wires between outdoor units into one system.
- Power must unified supply to all indoor units in the one system.
- Please do not put the signal wires and power wires in the same wire tube; keep distance between the two tubes. (Keep distance above 300mm; when current capacity of power supply less than 10A, and Keep distance above 500mm, when current capacity of power supply less than 50A).
- Make sure to address the outdoor unit which is in combination type.

7.2.3 Electric characteristics

Model	Outdoor Unit				Power Supply			Compressor		OFM	
	Hz	Voltage	Min.	Max.	MCA	TOCA	MFA	MSC	RLA	kW	FLA
TMVV4S-252HT1I/04AT03T	50	380~415	342	440	18.4	20.8	25	-	17.4	0.42	4.4
TMVV4S-280HT1I/04AT03T	50	380~415	342	440	20.6	22.1	25	-	17.4	0.42	4.4
TMVV4S-335HT1I/04AT03T	50	380~415	342	440	27.3	30.8	35	-	17.4+10.5	0.42	4.4
TMVV4S-400HT1I/04AT03T	50	380~415	342	440	27.9	31.8	35	-	17.4+10.5	0.36×2	3.4×2
TMVV4S-450HT1I/04AT03T	50	380~415	342	440	33.4	32.8	35	-	17.4+10.5	0.36×2	3.4×2
TMVV4S-500HT1I/04AT03T	50	380~415	342	440	40.1	40.5	45	-	17.4×2	0.36×2	3.4×2

The current value of combination unit is the total value of each basic model (refer to Units Combination Table in Part1)
For example: 46HP=16HP+16HP+14HP
Power current: MCA=33.4+33.4+27.9=94.7
TOCA=32.8+32.8+31.8=97.4
MFA=35+35+25=105
Compressor: RLA=(17.4+10.5)+ (17.4+10.5)+ (17.4+10.5)=83.7
OFM: FLA=3.4×2+3.4×2+3.4×2=20.4

Remark:

MCA: Min. Current Amps. (A)
TOCA: Total Over-current Amps. (A)
MFA: Max. Fuse Amps. (A)
MSC: Max. Starting Amps. (A)
RLA: Rated Locked Amps. (A)
OFM: Outdoor Fan Motor.
FLA: Full Load Amps. (A)

KW: Rated Motor Output (kW)

Notes:

1. RLA is based on the following conditions, Indoor temp. 27℃ DB/19℃ WB,Outdoor temp. 35℃ DB
2. TOCA means the total value of each OC set.
3. MSC means the Max. current during the starting of compressor.
4. Voltage range. Units are suitable for use on electrical systems where voltage supplied to unit terminals is not below or above listed range limits.
5. Maximum allowable voltage variation between phases is 2%.
6. Selection wire size based on the larger value of MCA or TOCA.
7. MFA is used to select the circuit breaker and the ground fault circuit interrupter (earth circuit breaker).

7.3 Signal wiring installation

The signal line should be shielded wire. Using other wiring shall create signal interference, thus leading to error operation.

The shielded nets at the two sides of shielded wires are either grounded to the earth, or connected with each other and jointed to the sheet metal along to the earth.

Signal wire could not be bound together with refrigerant pipeline and power wire. When power wire and signal wire is distributed in parallel form, keep gap between them above 300mm so as to preventing signal interference.

Signal wire could not form closed loop.

Signal wire has polarity, so be careful when connecting.

The shield net should be grounded at the wiring terminal of outdoor unit. The inlet and outlet wire net of indoor signal wire should be connected directly and could not be grounded, and form open circuit at the shield net of final indoor unit.

7.3.1 Signal wire between outdoor unit and indoor unit

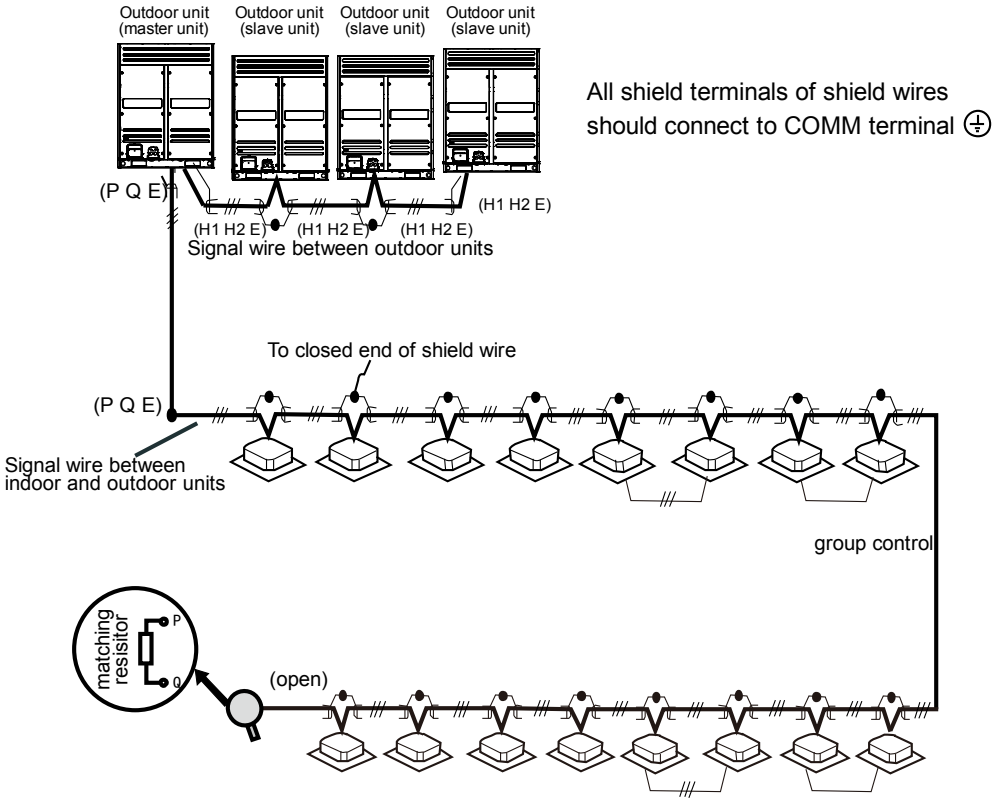

The indoor unit at the terminal of communication system should parallel connect a resisitor between port P and port Q.

7.3.2 Example connection of wiring

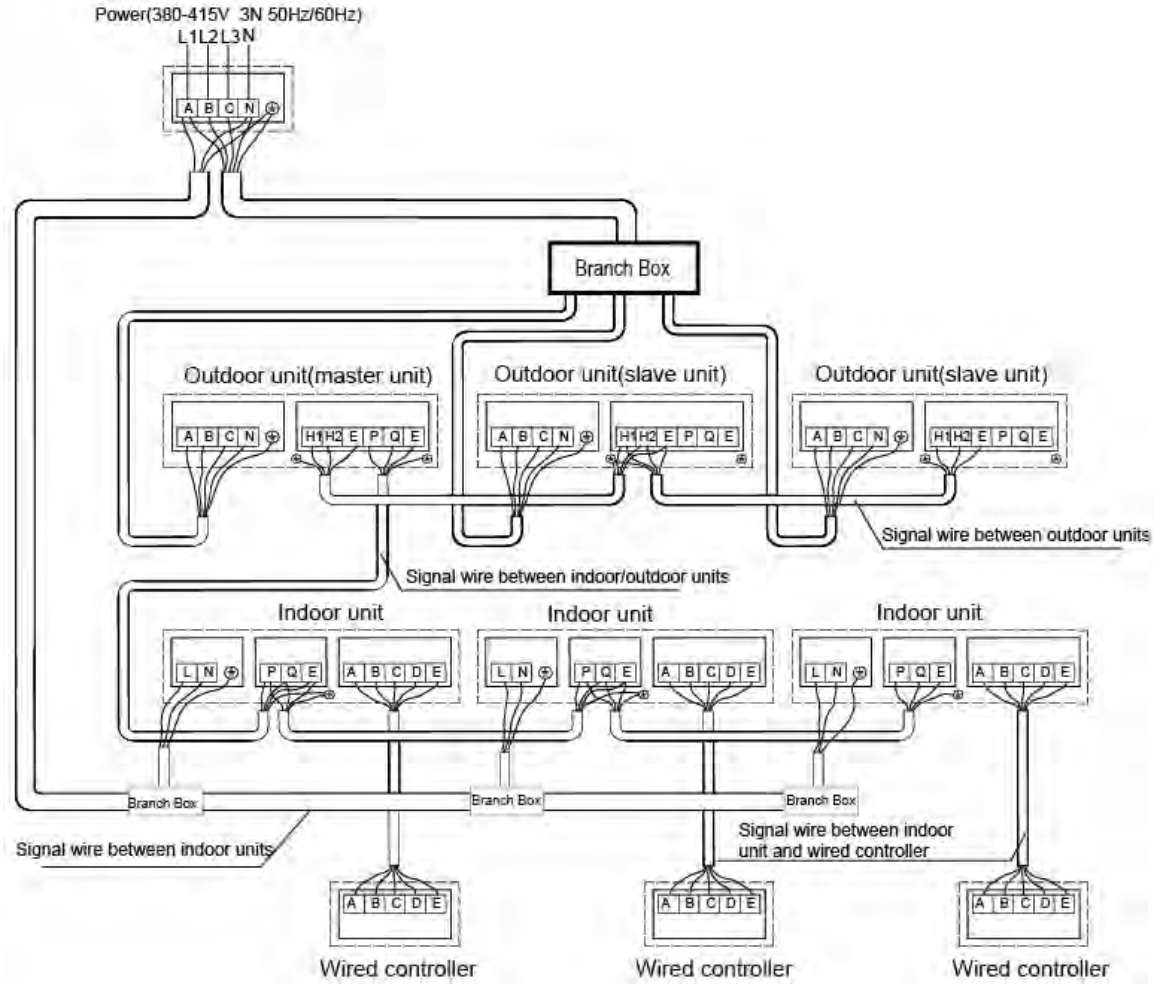

7.3.3 Signal wire of centralized control

Signal wire of centralized control

When centralized control is needed, one CCM03 (central controller of indoor unit) can only control the indoor units which are in the same refrigerant system **via the port X Y E of outdoor unit.** Outdoor unit will automatically distribute the address to indoor units without any manual setting. Remote controller can enquiry and modify every indoor unit address.

The diagram below shows the connection of signal wire in this case:

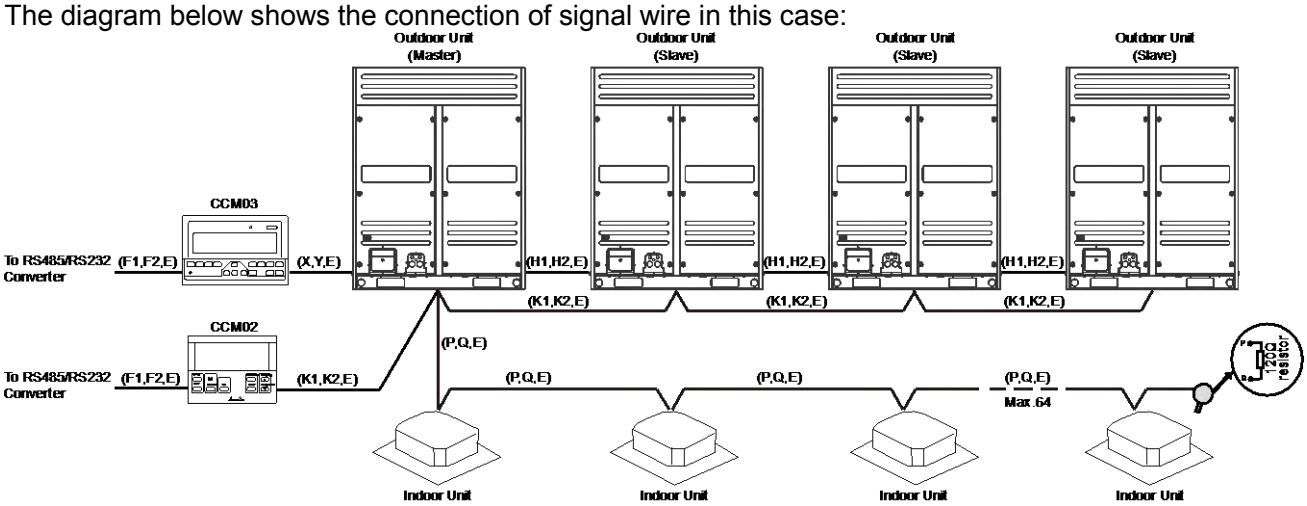

Besides, CCM03 can also connect indoor units **via the port X Y E of indoor unit**. However, one more group of wire(X Y E between indoor units) is needed; it is more complex and not suggested. Anyway, the diagram below shows the connection of signal wire in this case:

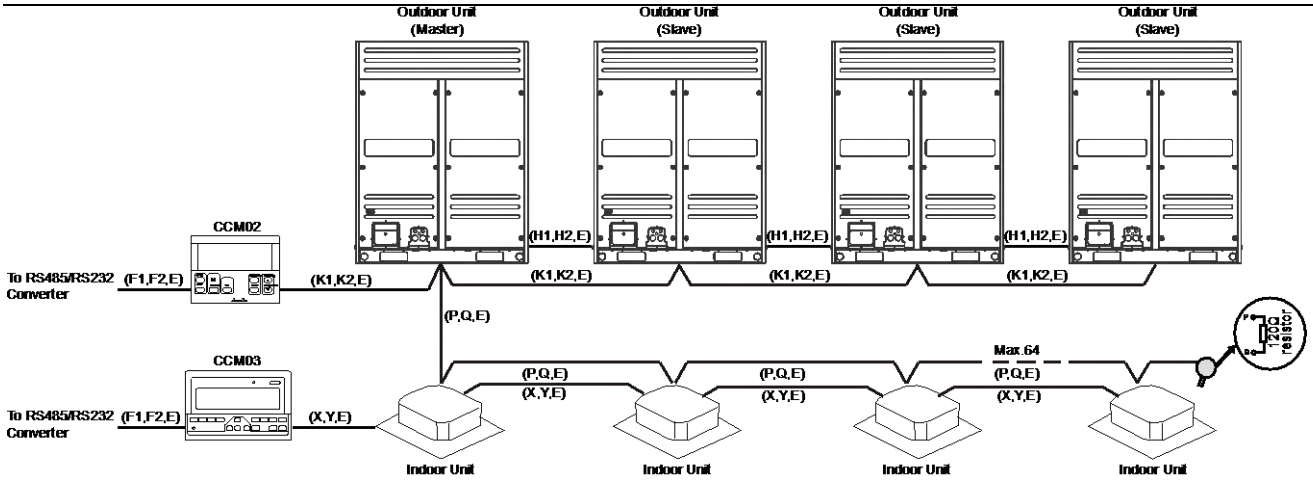

8. Commissioning and Trial Running

8.1 Work before Commissioning

8.1.1 Inspection and confirmation before Commissioning

1. Check and confirm that refrigeration pipe line and communication wire with indoor and outdoor unit have been connected to the same refrigeration system. Otherwise, operation troubles shall happen.
2. Power voltage is within ±10% of rated voltage.
3. Check and confirm that the power wire and control wire are correctly connected.
4. Check whether wire controller is properly connected.
5. Before powering on, confirm there is no short circuit to each line.
6. Check whether all units have passed nitrogen pressure-keeping test for 24 hours with R410A: 40kg/cm^2.
7. Confirm whether the system to Commissioning has been carried out vacuum drying and packed with refrigeration as required.

8.1.2 Preparation before Commissioning

1. Calculating the additional refrigerant quantity for each set of unit according to the actual length of liquid pipe.
2. Keep required refrigerant ready.
3. Keep system plan, system piping diagram and control wiring diagram ready.
4. Record the setting address code on the system plan.
5. Turn on power switches outdoor unit in advance, and keep connected for above 12 hours so that heater heating up refrigerant oil in compressor.
6. Turn on gas pipe stop valve, liquid pipe stop valve, oil balance valve and gas balance valve totally. If the above valves do not be turned on totally, the unit should be damaged.
7. Check whether the power phase sequence of outdoor unit is correct.
8. All dial switches to indoor and outdoor unit have been set according to the Technical Requirement of Product.

Note: The setting of outdoor unit's dial switch should be conducted under power-off, otherwise the unit shall not identify. The following table shows the address and power of outdoor master and slave unit:

ADDRESS dial switch		POWER dial switch	
0	Master unit	0	8HP
1	Salve unit 1	1	10HP
2	Salve unit 2	2	12HP
3	Salve unit 3	3	14HP
⩾4	Invalid address, system error	4	16HP
/		5	18HP
/		⩾5	Invalid dial switch

8.2 Commissioning of Trial Run

8.2.1 Commissioning for trail run of single unit.

1. Each independent refrigeration system (i.e. each outdoor unit) should be conducted trail operation.
2. Detection details of trail run:

1) As for fan in unit, make sure the rotating route of its impeller is correct and impeller turns around smoothly. No abnormal vibration and noise.
2) Check whether there is abnormal noise during operation of refrigerant system and compressor.
3) Check outdoor unit whether it can detect each indoor unit.
4) Check whether drainage is smooth and its lift pump can be in motion.
5) Check whether microcomputer controller can be in motion normally and whether any trouble appears.
6) Check whether operating current is within the allowed range.
7) Check whether each operating parameter is within the range permitted by the equipment.

Note: When conducting trial run, separately test cooling mode and heating mode to judge the stability and reliability of system.

8.2.2 Commissioning for the trial run of the paralleled system

1. Check and confirm that operation of single unit is normal through trial operation. After confirm it is normal, conduct operation of the whole system, i.e., Commissioning of MDV system.
2. Commissioning is carried out according to the Technical Requirement of Product. When Commissioning, analyze and record operation status so as to understand the operation status of the whole system for convenient maintenance and examination.
3. After finishing Commissioning, fill out Commissioning report in detail.

The commissioning report form is shown as follows:

Commissioning Report for Trust V4+S Pro System

Date:_____dd_____mm_____yy

Item name:	
Address:	**Tel:**
Supplier:	**Delivery date: dd mm yy**
Installation section:	**Principal:**
Commissioning section:	**Principal:**
Remark: recharged refrigeration quantity to system: _____kg **Name of refrigerant:_____ (R22, R407C, R410A)**	

Installing section:_____
(seal)

Signature:_____

Date: _____dd____mm____yy

Commissioning name:_____
(seal)

Signature:_____

Date: _____dd____mm____yy

Test Data for Test Run of _____System

Model of outdoor unit	Production series no.

Operation data of outdoor unit (Cooling)

Unit	No.1		No.2		No.3	
Run Voltage V						
Total current of run A						
Operation current of compressor A						
High-pressure pressure Kg/cm^2						
Low-pressure pressure Kg/cm^2						
Inlet air temperature °C						
Outlet air temperature °C						

Operation data of indoor unit

No.	Position	Model	Bar code of indoor unit	Inlet air temperature °C	Outlet air temperature °C
1					
2					
3					
4					
5					
6					
7					
8					
9					
10					
11					
12					
13					
14					
15					
16					

System parameter

SW2:

(CHECK)——Used to query outdoor unit data. Check point sequence and corresponding actuality is as follows:

No.	Display code	Display content	Note	No.	Display code	Display content	Remark
1	0--	Address of outdoor unit	0,1,2,3	18	17--	Current of inverter compressor A	Actual value
2	1--	Capacity of outdoor unit	8,10,12,14,16,18	19	18--	Current of inverter compressor B	Actual value
3	2--	Quantity of Modular outdoor unit	Available for main unit	20	19--	Opening angle of EXV A	Display value ×8
4.	3--	Quantity setting of indoor units	Available for main unit	21	20--	Opening angle of EXV B	Display value ×8
5	4--	Total capacity of outdoor unit	Capacity requirement	22	21--	High pressure	Actual value ×10
6	5--	Total requirement of indoor unit capacity	Available for main unit	23	22--	Reserve	
7	6--	Total requirement of main unit corrected capacity	Available for main unit	24	23--	Quantity of indoor units	
8	7--	Operation mode	0,2,3,4	25	24--	Quantity of the working indoor units	Actual value
9	8--	This outdoor unit actual operation capacity	Capacity requirement	26	25--	Priority mode	0,1,2,3,4
10	9--	Speed of fan A	0,1,……,14,15	27	26--	Night noise control mode	0,1,2,3
11	10--	Speed of fan B	0,1,……,14,15	28	27--	Static pressure mode	0,1,2,3
12	11--	T2/T2B average temperature	Actual value	29	28--	DC voltage A	Actual value ÷10
13	12--	T3 Pipe temperature	Actual value	30	29--	DC voltage B	Actual value ÷10
14	13--	T4 ambient temperature	Actual value	31	30--	Reserve	
15	14--	Discharge Temperature of Inverter Compressor A	Actual value	32	31--	Reserve	Display code 8.8.8
16	15--	Discharge Temperature of Inverter compressor B	Actual value	33	32--	——	Check end
17	16--	Reserve					

Note: When operation of system lasts 1 hour and stays stable, press checkup button on PCB of outdoor master unit, query one by one and fill out the above table according to facts.

Description of display:

Operation mode: 0---Turn off; 2---Cooling; 3---Heating; 4---Forced cooling

Fan speed: 0——OFF; 1~15——Speed increasing sequentially; 15——is the max. fan level.

PMV opening angle: pulse count = display value x 8.

Noise control mode: 0—Night silent mode;1——Silent mode; 2——Super silent mode; 3——None silent mode

Priority mode:0——heating priority mode;1——cooling priority mode; 2——opening the priority mode; 3——response the heating mode only; 4——response the cooling mode only.

SW1: Forced cooling button

SW2: Query switch

ENC1:Outdoor units address setting switch. ENC2: Outdoor units capacity setting switch. ENC3:Indoor units Quantity Setting switch.

ENC4: Network address setting switch.

Normal display: when in standby mode, it indicates number of indoor units, when running, it indicates output percentage value of compressor.

TRUST

Air Conditioning Systems

Cooling & Heating

TRUST AIR-CONDITIONING EQUIPMENT CO.
Shiraz office: 8 th floor, Alvand Blog., Dostan St.,
Moaliabad Ave., SHIRAZ, IRAN., Post code: 71877-14446
Tel.: +98-71-36341070
Fax.: +98-71-36341094
Tehran office: No. 19- koohe nour St.- Motahhari St.-
TEHRAN, IRAN., Post code: 15876-73111
Tel.: +98-21-89389
Fax.: +98-21-88541903
Ahwaz office: No. 309- Kaveh St.- AHWAZ, IRAN., Post code: 61939-47911
Tel.: +98-61-32230647-8 **E-mail: info@trustacs.com**
Fax.: +98-61-32230647 **Web site: http://www.trustacs.com**

برند برتر در اولین جشنواره بین‌المللی
برترین نام و نشان‌های تجاری ایران

ISO 9001 REGISTERED
DNV
MGMT. SYS.
RvA C 024
DNV Certification B.V., The Netherlands