TRUST
Air Conditioners

FAN COIL UNIT
(CONCEALED TYPE)

TRUST AIR CONDITIONING EQUIPMENT CO.
Prepared By: Engineering & R & D Department.

Shiraz- May 2017

Content

توجه:

شرکت تراست حق تغییر مشخصات دستگاه ها را در جهت بهبود و ارتقای کیفیت برای خود محفوظ می دارد.

2016

1. Installation

1.1 Installing site

- ◆ Install the unit where installation and maintenance space is enough.
- ◆ Install the unit where the ceiling is horizontal and enough to bear the weight of the indoor unit.
- ◆ Install the unit where the air inlet and outlet are not baffled and are the least affected by external air.
- ◆ Install the unit where the supply air flow can be sent to all parts in the room.
- ◆ Install the unit where it is easy to lead out the connective pipe and the drain pipe.
- ◆ Install the unit where connotative heat is emitted from a heat source directly.

Caution:

Installing the equipment in any of the following places may lead to faults of the equipment (if that is inevitable, consult the supplier):

- The site contains mineral oils such as cutting lubricant.
- Seaside where the air contains much salt.
- Hot spring area where corrosive gases exist, e.g., sulfide gas.
- Factories where the supply voltage fluctuates seriously.
- Inside a car or cabin.
- Place like kitchen where oil permeates.
- Place where strong electromagnetic waves exist.
- Place where flammable gases or materials exist.
- Place where acid or alkali gases evaporate.
- Other special environments.

Precautions before installation:

- Decide the correct way of conveying the equipment.
- Try to transport this equipment with the original package.
- If the air conditioner needs to be installed on a metal part of the building, electric insulation must be performed, and the installation must meet the relevant technical standards of electric devices.

1.2 Installing body

- ◆ Confirm the dimensions of the indoor unit against the following figure.
- ◆ Install Φ10 pendant bolts (4 bolts).
- ◆ The intervals of the pendant bolts are shown in the following figure.
- ◆ Use the Φ10 pendant bolts.
- ◆ The treatment of the ceiling varies between buildings. For detailed measures, negotiate with the construction and fit-out staff.
  - Scope of dismantling the ceiling. Please keep the ceiling horizontal. Reinforce the beams and girders of the ceiling lest vibration of the ceiling.
  - Cut off the beams and girders of the ceiling.
  - Reinforce the cut-off part, beams and girders of the ceiling.
- ◆ After the main body is suspended, work on the pipes and wires in the ceiling. Decide the lead-out direction of the pipes after selecting the installation site. Especially, in a circumstance where a ceiling is available, extend the refrigerant pipe, drain pipe, indoor/outdoor connection wires and wire controller lines to the connection position before suspending the unit.

1.2.1 Procedure of installing the pendant bolts.

1) Base on the unit structure, please set the screw-pitch according to the size of the following figures:

■ Woodenstructure:

Put rectangular sticks across the beams, and set pendant bolts.

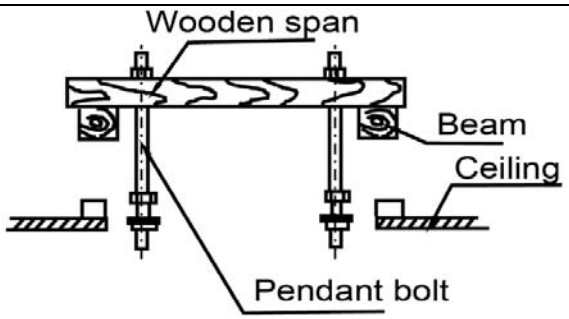

■ Old concrete roughcast:

Use embedded bolts and embedded pulling plugs.

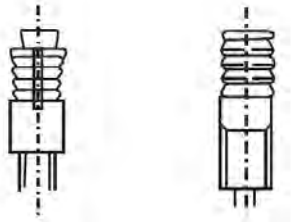

■ Steel beam and girder structure:

Set and use supportive angle steel.

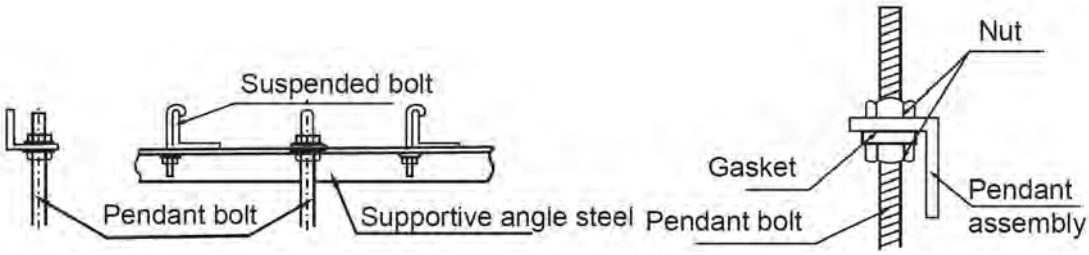

■ New concrete roughcast:

Set it with embedded bushes or embedded bolts.

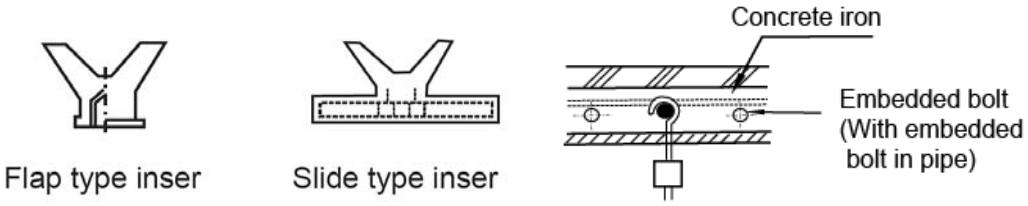

2) Suspending the indoor unit

- Use tools such as pulleys to hoist the indoor unit to the pendant bolt.
- Use tools such as gradient to settle the indoor unit horizontally. Lack of horizontality may cause water leak.

3) Connect the duct

The duct length is determined according to the external static pressure.

4) Install the wire control switch

For installation of the wire control switch, see the installation manual of the wire controller.

1.2.2 Body dimension

Please refer to chapter 7.

1.3 Installing extended drain pan

The grooves of the extended drain pan can be locked at the brim of the main drain pan.

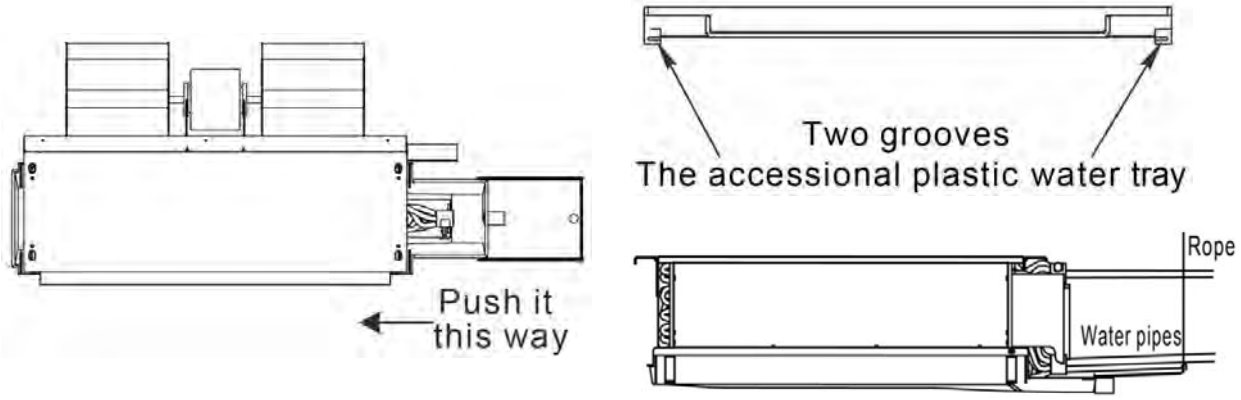

Please hang up the extended drain pan to the pipes or ceiling by a rope.

1.4 Installing water pipe

- With air release valve, the other side is water inlet pipe.
- When connect water collector, set the tightening torque to 6180~7540N.cm (630~770kgf.cm), and use a spanner to tighten it as shown in Figure.
- The diameter of connective junction in water inlet pipe and water outlet pipe is RC3/4 tapper pipe thread inside.
- The diameter of condensate pipe is ZG3/4 tapper pipe thread outside.

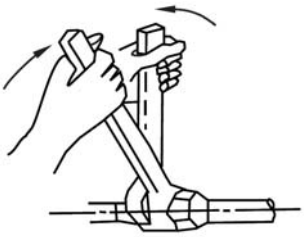

1.5 Installing drain pipe

■ Install the drain pipe of the fan coil unit

Before out from factory, the scupper adopts the pipe thread.

CAUTIONS:

- Be sure to perform heat insulation for the drain pipe of the indoor unit. Otherwise, condensate will occur. The joint of the indoor unit should also undergo heat insulation treatment.
- When performing the pipes connection, use the rigid PVC binder, and make sure that no leak exists.
- Same as the joint of the indoor unit. Be careful not to apply force at the pipe side of the indoor unit.
- The downward gradient of the drain pipe should be higher than (1/100), without bend in the middle.
- The total length of the drain pipe should not exceed 20m, when the pipe is over long, a prop stand must be installed to prevent winging.
- The centralized pipes should be distributed against the figure shown on the right side.

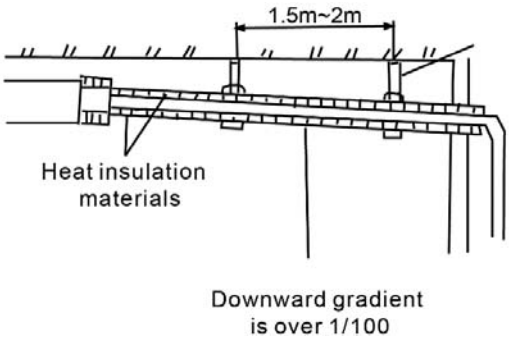

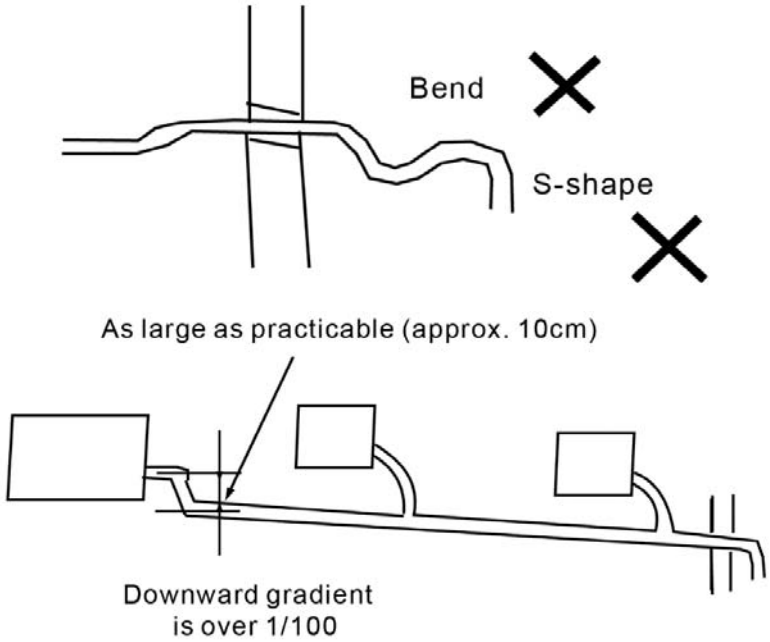

■ Drain test

Before the test, ensure that the drain pipes are smooth and the adapters are sealed.

Newly built rooms should undergo the drain test before the ceiling is laid.

1.6 Wiring installation

CAUTIONS:

- The air conditioner should use separate power supply with rated voltage.
- The external power supply to the air conditioner should have ground wiring, which is linked to the ground wiring of the indoor and outdoor unit.
- The wiring work should be done by qualified persons according to circuit drawing.
- An all-pole disconnection device which has at least 3mm separation distance in all pole and a residual current device(RCD) with the rating of above 10mA shall be incorporated in the fixed wiring according to the national rule.
- The appliance shall be installed in accordance with national wiring regulations.
- Be sure to locate the power wiring and the signal wrings well to avoid cross-disturbance.
- Do not turn on the power until you have checked carefully after wiring.

The wiring connection please refers to chapter 8.

2. Accessories

2.1 Standard accessories

Accessory name	Qty.	Shape	Usage
Owner's & installation manual	1	/	Installation guide
Extended drain pan	1		Connect drain water from valve kit

2.2 Optional accessories

Accessory name	Qty.	Shape	Usage
PCB control kit CE-FCUKZ-03	1		Electric control
Remote controller R05/BGE	1		Remote control
Remote controller R51/E	1		Remote control
Wired controller KJR-18B/E	1		Wired control
Wired controller KJR-21B/D	1		Wired control
Central controller CCM03	1		Central control

2.2.1 PCB control kit for FCU

1. Specifications

Model		CE-FCUKZ-03
Available appliance		2-pipe ducted FCU
Power supply		220-240V-1Ph-50Hz
Operation range	Room temperature	17℃~30℃
	Inlet water temperature	3℃~75℃
Temperature controlling precision		±1℃
Dimension (W×H×D)		296x66x212
Packing Size (W×H×D)		410x115x262

2. Internal View

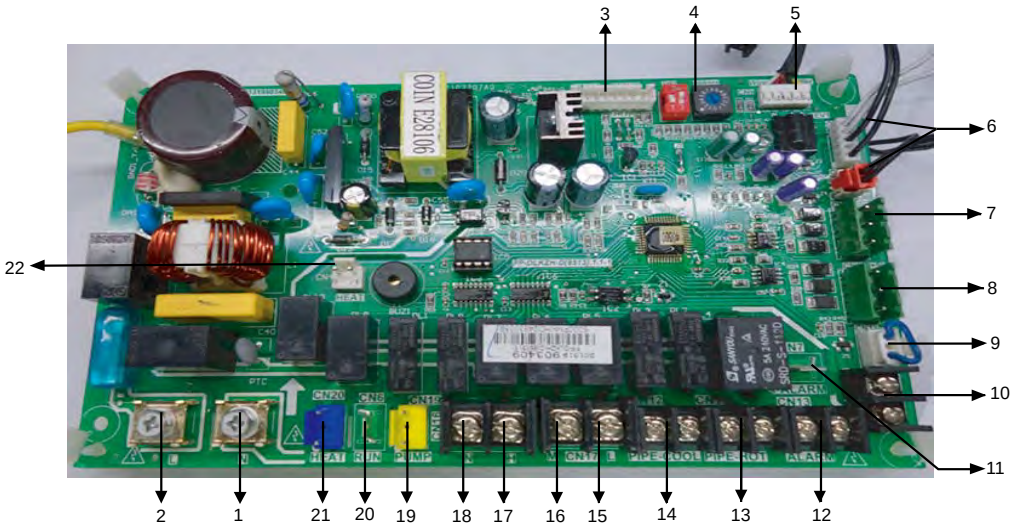

Note: CE-FCUKZ-03 adopts one valve switch, CE-FCUKZ-04 adopts two valve switches. When installing CE-FCUKZ-04 should connect the valve switch (CN12:PIPE-COOL and CN11：PIPE-HOT) and temp sensor (CN5:T1,T2-COOL and CN8:T2-HEAT), and place connects respond to the wiring nameplate.

- T1 is indoor temperature sensor, install to the air inlet of the indoor unit.
- T2-COOL,T2-HEAT is pipe temperature sensor.

<table>
<tr><th>No.</th><th>Detail information</th></tr>
<tr><td>1, 2</td><td>*L: Live wire
*N: Netrual wire
Power in: 220V-240V~, 50Hz/60Hz</td></tr>
<tr><td>3</td><td>CN300: DEBUG PORT</td></tr>
<tr><td>4</td><td>SW2, ENC1: Network address set, every air-conditioner in network has only one network address to distinguish each other, the set range is 0-63, please see the table blow.
<table>
<tr><th colspan="2">Toggle switch set</th><th rowspan="2">Network address code</th></tr>
<tr><th>SW2</th><th>ENC1</th></tr>
<tr><td></td><td></td><td>00~15</td></tr>
<tr><td></td><td></td><td>16~31</td></tr>
<tr><td></td><td></td><td>32~47</td></tr>
<tr><td></td><td></td><td>48~63</td></tr>
</table></td></tr>
<tr><td>5</td><td>CN9: Connect to wire controller.</td></tr>
<tr><td>6</td><td>CN5: T1, room temperature sensor (if fault, the wire controller light will flashes two times at 2Hz, stop 2s);
CN5: T2-COOL, pipe temperature sensor of condenser (if fault, the wire controller light will flashes three times at 2Hz, stop 2s);
*CN8: T2-HEAT, pipe temperature sensor of condenser (if fault, the wire controller light will flashes three</td></tr>
</table>

	times at 2Hz, stop 2s); *T2-HEAT, only using in CE-FCUKZ-04.
7	CN10: MODBUS RTU port, connect to upperunit. Inter connected with P, Q and E of used for RS-485 communication. Please adopts to the shielded twisted-pair wire, and connect the shielded layer to E. 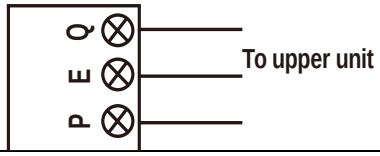
8	CN14: 485communication port, connect to centralized controller. Please adopts to the shielded twisted-pair wire, and connect the shielded lay to E. 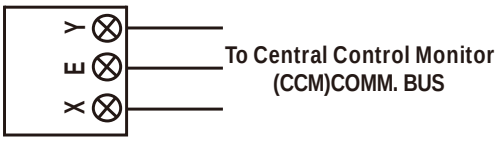
9	CN18: water-level switch (if fault, the wired controller light will flashes four times at 2Hz, stop 2s)
10	CN3: ON/OFF port, disconnect, the long-distance control function is invalid; when connect, the wire controller and centralized controller are invalid and system is equivalent of shutdown.
11	CN7: I-ALARM port, high voltage signal output, when system run normal (strong AC signal output)
12	CN13: ALARM port, high voltage signal when a alarm output (strong AC signal output).
13	*CN11: PIPE-HOT port, hot water valve, only using in CE-FCUKZ-04 (strong AC signal output).
14	CN12: PIPE-COOL port, cool water valve, using in CE-FCUKZ-03 or CE-FCUKZ-04 system in central air conditioner (strong AC signal output)
15	CN17: L, connect to indoor fan unit, low fan speed (strong AC signal output)
16	CN17: M, connect to indoor fan unit, medium fan speed (strong AC signal output)
17	CN16: H, connect to indoor fan unit, high fan speed (strong AC signal output)
18	CN16: N, connect to nutral wire.
19	CN19: PUMP (strong AC signal output). 1) After receiving start-up instruction and set in COOL, DRY mode, the pump will be started up instantly, and will maintain start-up state always in the process of operation. 2) To turn it off or transferred to other mode, the pump will be shut down 3 minutes after all modules stop operating.
20	CN6: RUN, high voltage signal output when the system run normal (strong AC signal output).
21	CN20: HEAT (strong AC signal output). Attention: the control port value of the CN20(HEAT) is STRONG AC signal output but can not drive electric heating directly. So special attention should be paid when installing this heat. Electric heating needs to be connected with 220V-240V~ power supply externally.
22	CN4: HEAT (DC +12V output). Attention: the control port value of the CN4(HEAT) actually detected is DC 12V siganl output and can not drive electric heating directly, so special attention should be paid when installing this heat. DC +12V control signal output by PCB can start/stop the external relay, thereby to start/stop e-heating pipe. Electric heating needs to be connected with 220V-240V~ power supply externally.

* CE-FCUKZ-03: Condenser Temp. sensor number is 1;
  CE-FCUKZ-04: Condenser Temp. sensor number is 2.
* L、N Port: Strongly recommend using Ring Terminal or Spade Terminal to connect.

3. Main features

- Suitable for 2-pipe and 4-pipe FCU.
- Installation flexible, it can be installed attaching on the unit, mounting on the wall or hanging under the ceiling.
- Maintenance convenient for its external installed.
- Three fan speeds adjustment: high/medium/low.
- Operating status can be displayed form lamp indicator.
- Network Interface Module standard, compatible with the CCM control and PC based software control.

4. Compatible control type

Model	Applicable appliance	Remote control	Wired control	Central control	PC based network control
CE-FCUKZ-03	2-pipe ducted FCU	√	√	√	√
CE-FCUKZ-04	4-pipe ducted FCU	√	√	√	√

5. Application control

5.1 Fan speed adjustment function 3 files

Available wire controller to select high, medium and low three operation modes.

5.2 Long-dIstance control and alarm functions

- Refer wiring diagram connected CN13 port to achieve fault alarm function.
- Through regulating CN3 port status to realize long-dIstance control function.
- When CN3 disconnect, the long-dIstance control function is invalid;
- When CN3 connect, the wire controller and Centralized Controller is invalid and the system is equivalent of shutdown.

5.3 Centralized control

Centralized control through the CCM03, please refer to the "Centralized control ower’s & Installation Manual"

TRUST

Air Conditioning Systems

Cooling & Heating

TRUST AIR-CONDITIONING EQUIPMENT CO.
Shiraz office: 8 th floor, Alvand Blog., Dostan St.,
Moaliabad Ave., SHIRAZ, IRAN., Post code: 71877-14446
Tel.: +98-71-36341070
Fax.: +98-71-36341094
Tehran office: No. 19- koohe nour St.- Motahhari St.-
TEHRAN, IRAN., Post code: 15876-73111
Tel.: +98-21-89389
Fax.: +98-21-88541903
Ahwaz office: No. 309- Kaveh St.- AHWAZ, IRAN., Post code: 61939-47911
Tel.: +98-61-32230647-8 **E-mail: info@trustacs.com**
Fax.: +98-61-32230647 **Web site: http://www.trustacs.com**

برند برتر در اولین جشنواره بین‌المللی
برترین نام و نشان‌های تجاری ایران

ISO 9001 REGISTERED
DNV
MGMT. SYS.
RvA C 024
DNV Certification B.V., The Netherlands