TRUST
Air Conditioners

inverter mini chiller

TRUST AIR CONDITIONING EQUIPMENT CO.
Prepared By: Engineering & R & D Department.

Shiraz- May 2017

Installation

1. INSTALLATION 2
2. CHECKING AND STARTING UP THE UNIT 15
3. RUNNING AND MAINTENANCE 17
4. CONTROLLER 20

توجه:

شرکت تراست حق تغییر مشخصات دستگاه ها را در جهت بهبود و ارتقای کیفیت برای خود محفوظ می دارد.

2016-02

1. Installation

1.1 Installation of general information

General warning

1. These units have been designed to chilled and hot water and must be used in applications compatible with their performance characteristics; these appliances are designed for residential or similar applications.

2. Incorrect installation, regulation and maintenance or improper use absolves the manufacturer from all liability, whether contractual or otherwise, for damage to people, animals or things. Only those applications specifically indicated in this list are permitted.

3. Read this manual carefully. All work must be carried out by qualified personnel in conformity with legislation in force in the country concerned.

4. The guarantee is invalidated if the above instructions are not respected and if the unit is started up for the first time without the presence of personnel authorized by the Company (where specified in the supply contract) who should draw up a “start-up” report.

5. The documentation supplied with the unit must be consigned to the owner who should keep it carefully for future consultation in the event of maintenance or service.

6. All repair or maintenance work must be carried out by the Company’s Technical Service or qualified personnel following the instructions in this manual. The air-conditioner must under no circumstances be modified or tampered with as this may create situations of risk. Failure to observe this condition absolves the manufacturer of all liability for resulting damage.

Fundamental safety rules

When operating equipment involving the use of electricity and water, a number of fundamental safety rules must be observed, namely:

Prohibition

1. This appliance is not intended for use by persons (including children) with reduced physical, sensory or mental capabilities, or lack of experience and knowledge, unless they have been given supervision or instruction concerning use of the appliance by a person responsible for their safety.

2. Do not touch the unit with bare feet or with wet or damp parts of the body.

3. Do not carry out cleaning operations without first disconnecting the system from the electricity supply.

4. Do not modify safety or regulation devices without authorization and instructions from the manufacturer.

5. Do not pull, detach or twist the electrical cables coming from the unit, even when disconnected from the mains electricity supply.

6. Do not open doors or panels providing access to the internal parts of the unit without first ensuring that the mains switch is in the off position.

7. Do not introduce pointed objects through the air intake and outlet grills.

8. Do not dispose of, abandon or leave within reach of children packaging materials (cardboard, staples, plastic bags, etc.) as they may represent a hazard.

Important

1. The chiller appliances are supplied without the main switch. The power supply to the unit must be disconnected using a suitable main switch that must be supplied and installed by the installer.

2. Respect safety distances between the unit and other equipment or structures. Guarantee adequate space for access to the unit for maintenance and/or service operations.

Power supply: the cross section of the electrical cables must be adequate for the power of the unit and the power supply voltage must correspond with the value indicated on the respective units. All units must be earthed in conformity with legislation in force in the country concerned.

3. Hydraulic connections should be carried out as indicated in the instructions to guarantee correct operation of the unit. Empty the water circuit or add glycol if the unit is not used during the winter. Handle the unit with the utmost care to avoid damage.

1.2 Installation of outdoor unit

Choice of installation site

Before installing the unit, agree with the customer the site where it will be installed, taking the following points into consideration:

- Check that the fixing points are adequate to support the weight of the unit.

- Pay scrupulous respect to safety distances between the unit and other equipment or structures to ensure that air entering the unit and discharged by the fans is free to circulate.

Positioning

Before handling the unit, check the capacity of the lifting equipment used, respecting the instructions on the packaging.

To move the unit in the horizontal, make appropriate use of a lift truck or similar, bearing in mind the weight distribution of the unit. To lift the unit, insert tubes long enough to allow positioning of the lifting slings and safety pins in the feet on the unit.

To avoid the slings damaging the unit, place protection between the slings and the unit. Position the unit in the site indicated by the customer. Place either a layer of rubber (min. thickness 10 mm) or vibration damper feet (optional) between the base and support surface. Fix the unit, making sure it is level and that there is easy access to hydraulic and electrical components. If the site of installation is exposed to strong winds, fix the unit adequately to the support surface using tie rods if necessary. If a heat pump unit is being installed, make sure the condensate is drained using the drain hose supplied as standard. Prevent leaves, branches or snow from accumulating around the unit. These could reduce the efficiency of the unit.

Installation space (units: mm)

1. Since the gravity center of the unit is not at its physical center, so please be careful when lifting it with a sling.
2. Never hold the inlet of the outdoor unit to prevent it from deforming.
3. Do not touch the fan with hands or other objects.
4. Do not lean it more than 45℃, and do not lay it sidelong.
5. Make concrete foundation according to the specifications of the outdoor units.
6. Fasten the feet of this unit with bolts firmly to prevent it from collapsing in case of earthquake or strong wind.

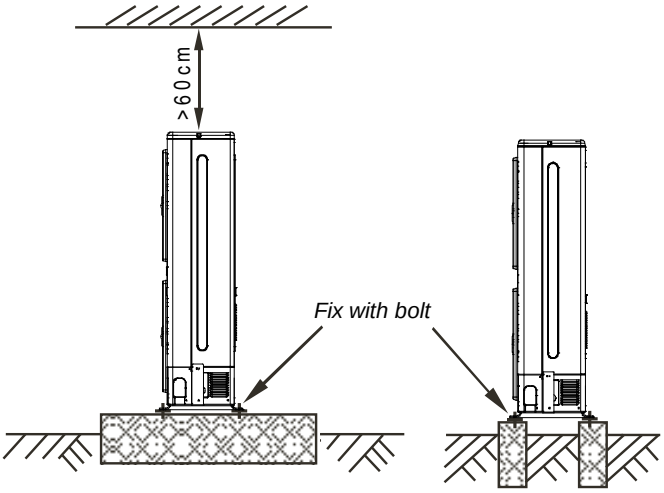

Single unit installation

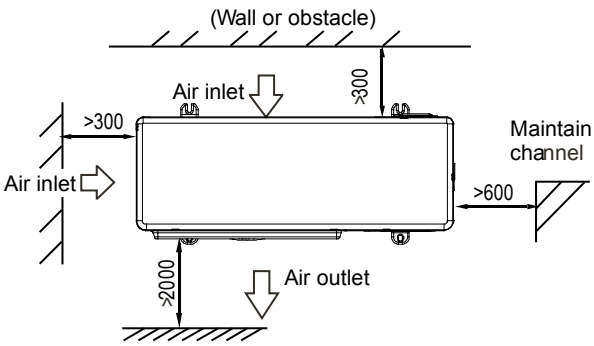

Parallel connect two units or above

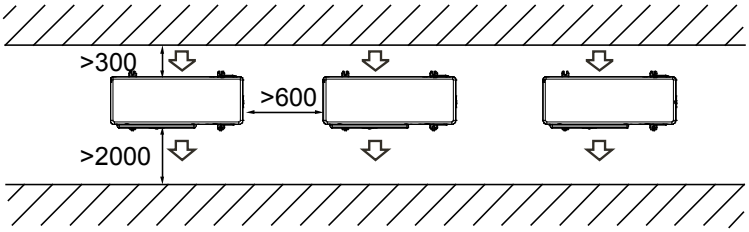

Parallel connect the front with rear sides

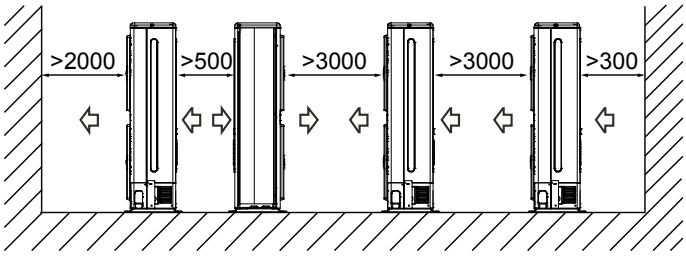

All the pictures in this manual are for explanation purpose only. They may be slightly different from the air conditioner you purchased (depend on model). The actual shape shall prevail.

1.3 Hydraulic connection

The choice and installation of components is the responsibility of the installer who should follow good working practice and current legislation. Before connecting the pipes, make sure they do not contain stones, sand, rust, or others which might damage the unit. Construction of a bypass is recommended to enable the pipes to be washed through without having to disconnect the unit (see drain valves). The connection piping should be supported in such a way as to avoid it weighing on the unit. It is recommended that the following devices are installed in the water circuit of the evaporator. A hydraulic safety valve shall be mounted in water system, which should open constantly.

Connecting drawing of pipeline system

TMUN0010, TMUN0012, TMUN0014, TMUN0016

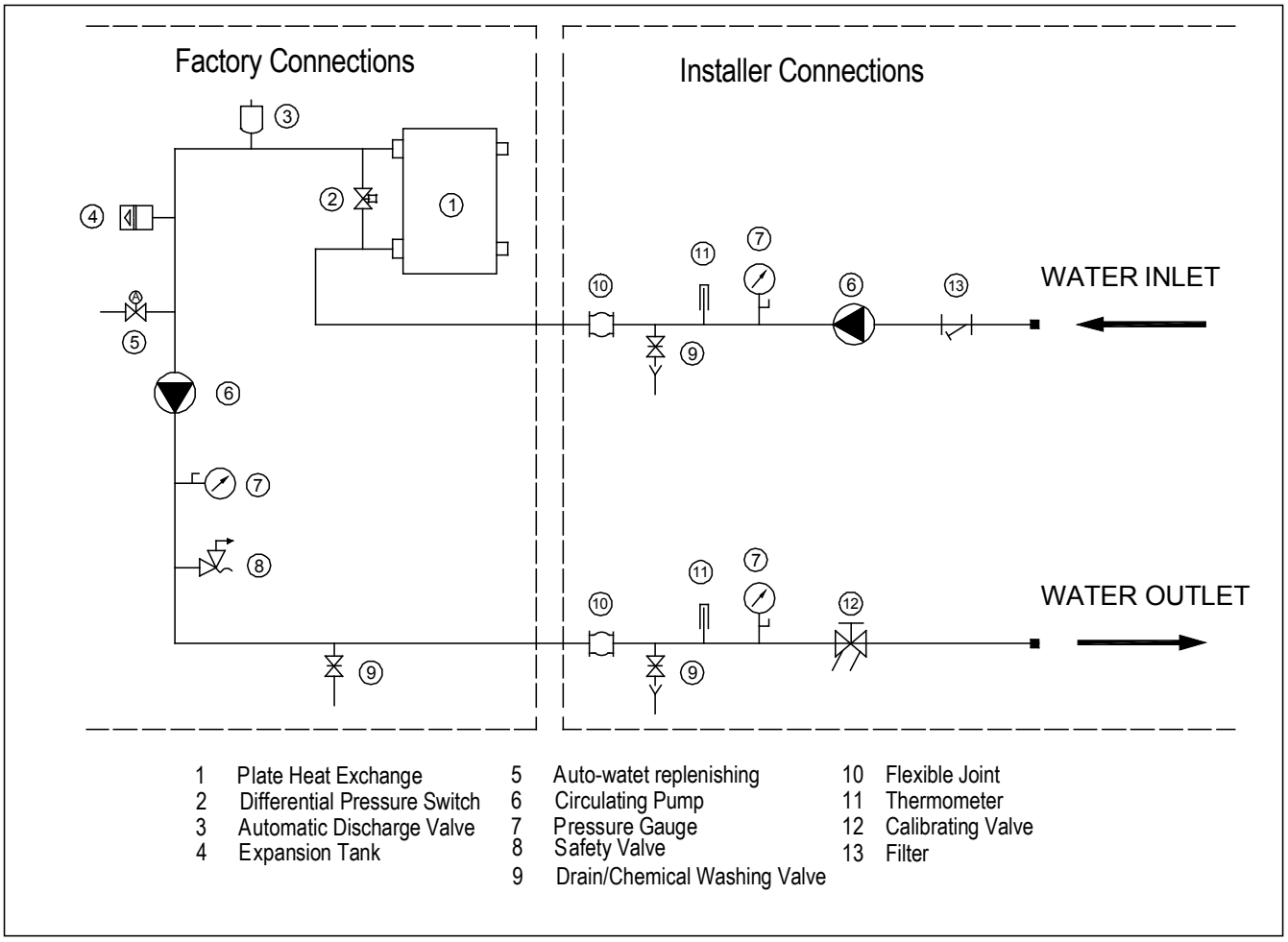

If the installation requires a useful head higher than that obtained by installing a pump assembly and storage tank, it is recommended that an additional pump is installed on the unit. Provided the additional pump installed inside of unit, the pump must be connected close to plate heat exchanger. Provided the pump installed outside of unit, the pump shall be connected at water pipe's outlet. The pump can be easily installed in the unit by removing the pump connection pipe. Connect to terminal PL, PN on the electric panel.

Important

1) The chillers must be provided with a filling/top-up system connected to the return line and a drain cock in the lowest part of the installation. Installations containing anti-freeze or covered by specific legislation must be fitted with hydraulic disconnections.

2) The manufacturer is not liable for obstruction, breakage or noise resulting from the failure to install filters or vibration dampers. Particular types of water used for filling or topping up must be treated with appropriate treatment systems.

1.4 Design of the store tank in the system

- kW is the unit for cooling capacity, L is the unit for (G) minimum water flow volume in the formula.

  Comfortable type air conditioner

  G= cooling capacity×2.6L

  Process type cooling

  G= cooling capacity×7.4L

- In certain occasion (especially in manufacture cooling process), for conforming the system water content requirement, it's necessary to mount a tank equipping with a cut-off baffle at the system to avoid water short-circuit, Please see the following schemes:

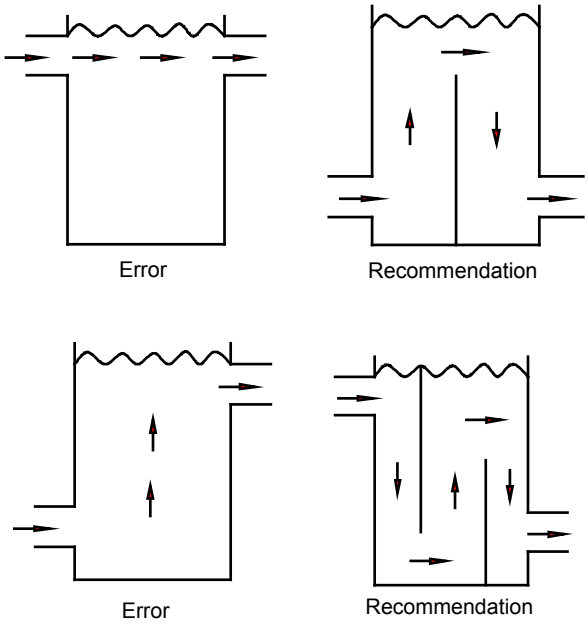

Fig.4.4

1.5 Chilled water flow

Minimum chilled water flow

The minimum chilled water flow is shown in the below table.

If the system flow is less than the minimum unit flow rate, the evaporator flow can be recalculated, as shown in the diagram.

For minimum chilled water flow rate

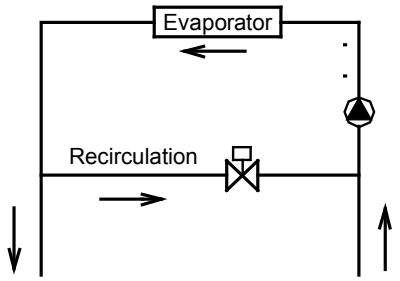

For maximum chilled water flow rate

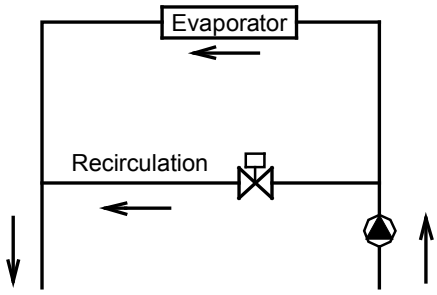

Maximum chilled water flow

The maximum chilled water flow is limited by the permitted pressure drop in the evaporator. It is provided in the below table. If the system flow is more than the maximum unit flow rate, bypass the evaporator as shown in the diagram to obtain a lower evaporator flow rate.

Minimum and maximum water flow rates

Item / Model	Water flow rate(m^3/h)	
	Minimum	Maximum
TMUN0010I1	1.54	1.89
TMUN0012I1	1.72	2.11
TMUN0012I3	1.72	2.11
TMUN0014I3	1.93	2.36
TMUN0016I3	2.24	2.73

1.6 Design of expansion tank

If a closed expansion tank with its filled volume of air is too small, the system pressure will easily exceed the maximum allowable pressure and cause water to discharge from the pressure relief valve, thus wasting water. If the closed tank is too large, when the water temperature drops, the system pressure may decrease to a level below the minimum allowable value and cause trouble in the air vent. Therefore, accurate sizing of a closed expansion tank is essential.

For diaphragm expansion tanks, the minimum volume of the water tank, Vt, gal (m^3), can be calculated by the following formula, recommended by ASHRAE Handbook 1996, HVAC Systems and Equipment:

$$V_t=V_s\left\{\frac{v_2/v_1-1-3\,\alpha\,(T_2-T_1)}{1-p_1/p_2}\right\}$$

T1=lower temperature, ˚F (˚C)

T2=higher temperature, ˚F (˚C)

Vs=volume of water in system, gal(m3)

p1=absolute pressure at lower temperature, psia (kPa abs.)

p2=absolute pressure at higher temperature, psia (kPa abs.)

v1, v2 =specific volume of water at lower and higher temperature, respectively, ft3/lb(m3/kg)

α =linear coefficient of thermal expansion; for steel, α =6.5x10-6in./in・˚F(1.2x10-5per˚C); For copper,

α =9.5x10-6in./in・˚F(1.7x10-5per˚C)

In a chilled water system, the higher temperature T2 is the highest anticipated ambient temperature when the chilled water system shuts down during summer. The lower temperature in a heating system is often the ambient temperature at fill conditions(for example, 50°F or 10°C).

1.7 Water quality control

When industrial water is used as chilled water, little furring may occur; however, well water or river water, used as chilled water, may cause much sediment, such as furring, sand, and so on. Therefore, well water or river water must be filtered and softened in softening water equipment before flowing into chilled water system. If sand and clay settle in the evaporator, circulation of chilled water may be blocked, and thus leading to freezing accidents; if hardness of chilled water is too high, furring may occur easily, and the devices may be corroded. Therefore, the quality of chilled water should be analyzed before being used, such as PH value, conductivity, concentration of chloride ion, concentration of sulfide ion, and so on.

PH	6~8
Total hardness	less than 50 ppm
Electrical conductivity	less than 200 mV/cm (25℃)
Sulfide ion	none
Chlorine ions	less than 50 ppm
Ammonia ions	none
Sulfate ion	less than 50 ppm
Silicon	less than 30 ppm
Total iron	less than 0.3 ppm
Sodium ion	No requirement
Calcium ion	less than 50 ppm

Filling the installation

- Before filling, check that the installations drain cock is closed.
- Open all installation and terminal air vents.
- Open the gate valves.
- Begin filling, slowly opening the water filling cock outside the unit.
- When water begins to leak out of the terminal air vent valves, close them and continue filling until the pressure gauge indicates a pressure of 1.5 bars.

Emptying the installation

- Before emptying, place the mains switch in the “off” position.
- Make sure the installation fill/top-up water cock is closed.
- Open the drain cock outside the unit and all the installation and terminal air vent valves.

Size and position of connections

TMUN0010, TMUN0012, TMUN0014, TMUN0016

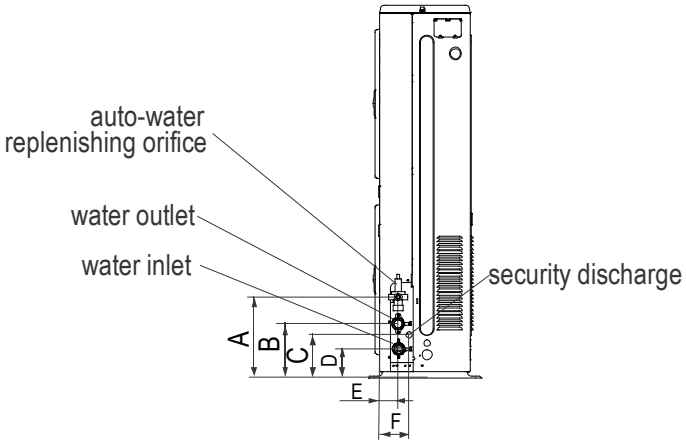

Model	A (mm)	B (mm)	C (mm)	D (mm)	E (mm)	F (mm)	Water inlet/outlet (Ø)	Auto-water replenishing (Ø)	Security discharge (Ø)
TMUN0010I1 TMUN0012I1 TMUN0012I3 TMUN0014I3 TMUN0016I3	300	195	155	105	68	105	R5/4	G1/2	G1/2

⚠ Important

a) The installation must be filled to a pressure of between 1 and 2 bars.

b) It is recommended that this operation be repeated after the unit has been operating for a number of hours. The pressure of the installation should be checked regularly and if it drops below 1 bar, the water content should be topped-up.

c) Check the hydraulic tightness of joints.

d) An all-pole disconnection device which has at least 3mm separation distance in all pole and a residual current device (RCD) with the rating of above 10mA shall be incorporated in the fixed wiring according to the

national rule the appliance shall be installed in accordance with national wiring regulations.

e) If the fluid in the circuit contains anti-freeze, it should not be allowed to drain freely as it is pollutant. It should be collected for possible reuse. When draining after heat pump operation, take care as the water may be hot (up to 50°).

1.8 Electrical connection

The unitary mini chillers leave the factory already wired, and require the installation of an omni polar thermal overload switch, a lockable mains disconnecting switch for the connection to the mains power supply, and the connection of the flow switch to the corresponding terminals. All the above operations must be carried out by qualified personnel in compliance with the legislation in force.

For all electrical work, refer to the electrical wiring diagrams in this manual. You are also recommended to check that the characteristics of the mains electricity supply are adequate for the absorptions indicated in the electrical characteristics table below, also bearing in mind the possible use of other equipment at the same time.

⚠ **Important**

- Power to the unit must be turned on only after installation work (hydraulic and electrical) has been completed.
- All electrical connections must be carried out by qualified personnel in accordance with legislation in force in the country concerned.
- Respect instructions for connecting phase, neutral and earth conductors.
- The power line should be fitted upstream with a suitable device to protect against short-circuits and leakage to earth, isolating the installation from other equipment.
- Voltage must be within a tolerance of ±10% of the rated power supply voltage for the unit (for three phase units, the unbalance between the phases must not exceed 3%).If these parameters are not respected, contact the electricity supply company.
- For electrical connections, use double insulation cable in conformity with current legislation in the country concerned.
- An omnipolar thermal overload switch and a lockable mains disconnecting switch, in compliance with the CEI-EN standards (contact opening of at least 3mm), with adequate switching and residual current protection capacity based on the electrical data table shown below, must be installed as near as possible to the appliance.
- The devices on the unit must be lockable. An efficient earth connection is obligatory. Failure to earth the appliance absolves the manufacturer of all liability for damage.
- Do not use water pipes to earth the unit.

■ Electrical Panel

The electrical panel is located inside the unit at the top of the technical compartment where the various components of the refrigerant circuit are also to be found.

To access the electrical panel, remove the front panel of the unit by undoing the screws.

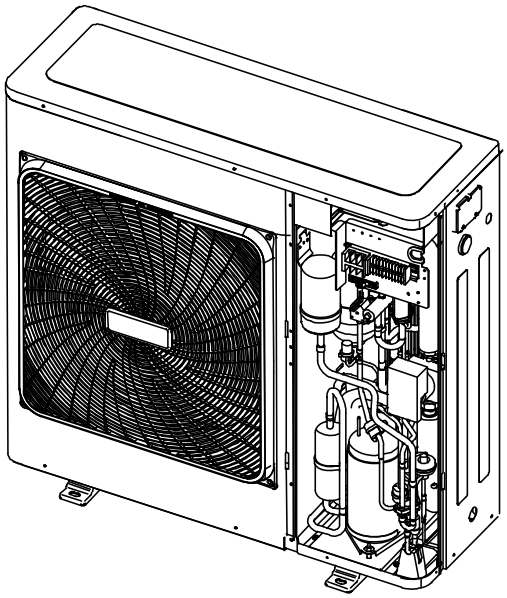

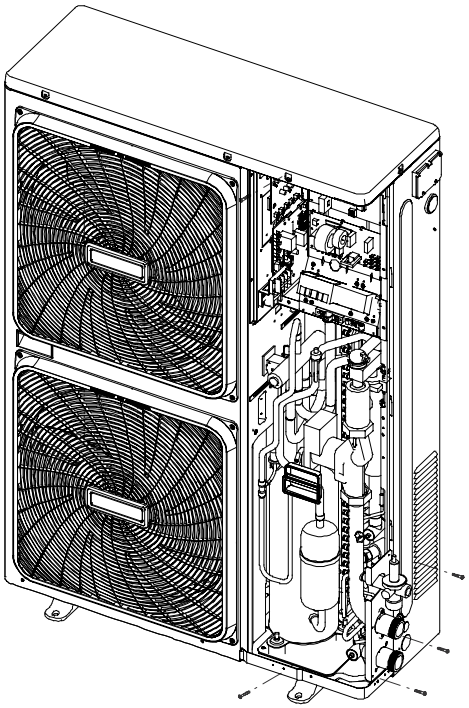

10~16kW

■ Electrical Power Connection

TMUN0010I1, TMUN0012I1

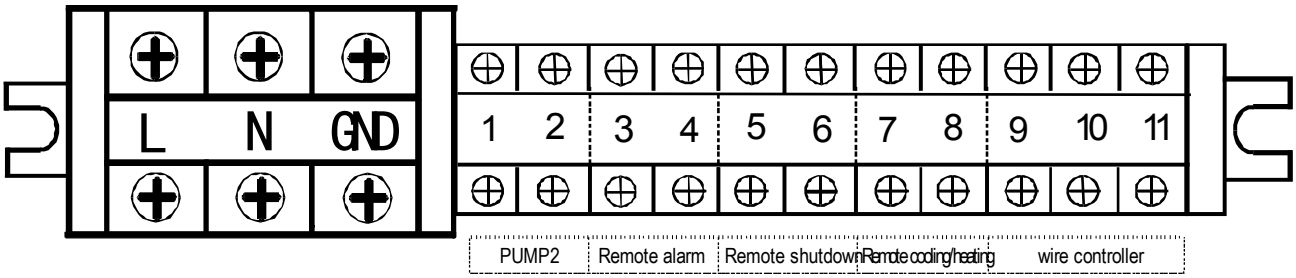

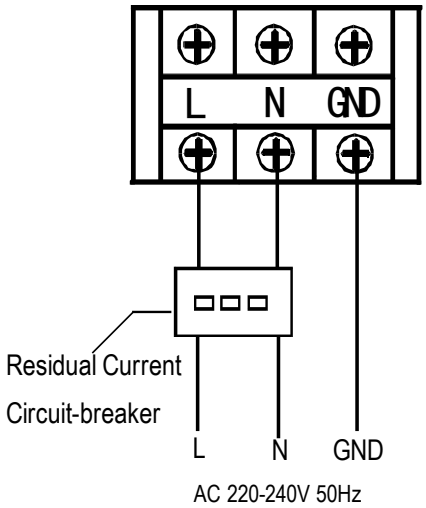

NOTE: The outdoor units must be installed with a Residual Current Circuit-breaker near the power supply and must be effectively earthed.

TMUN0012I3, TMUN0014I3, TMUN0016I3

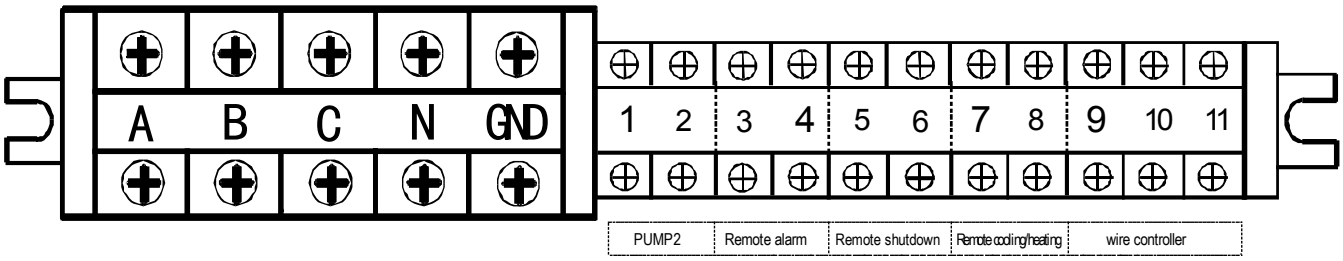

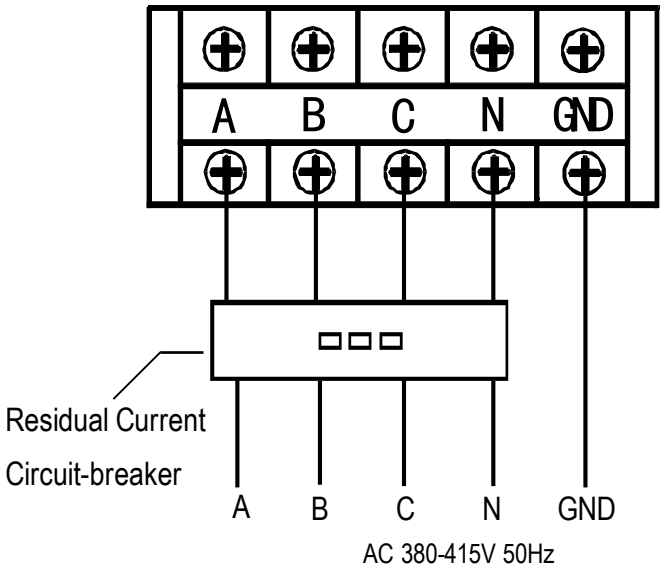

Additional pump

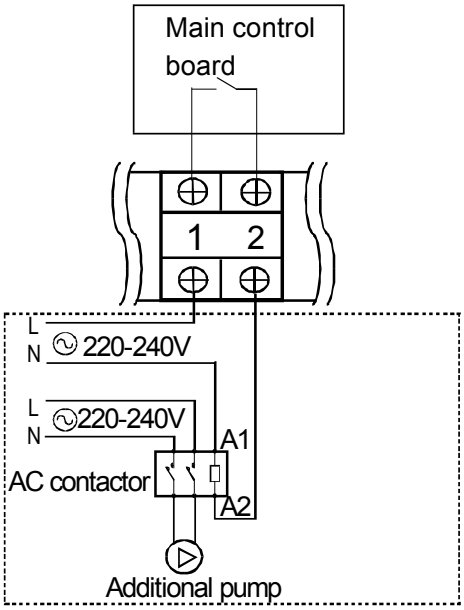

"PUMP2" terminal only provides passive switching signal.
Additional water pump must be controlled by the AC contactor.

■ Remote alarm

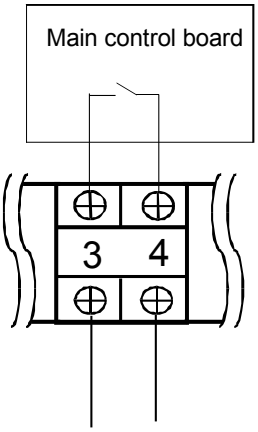

Remote alarm terminal only provides passive switching signal.
Current passing through the terminal interface should less than 1.5A, otherwise please use AC contactor to control load indirectly.

■ Remote shutdown

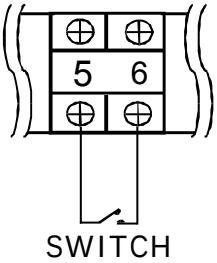

If switch is closed, the unit will be stopped forcibly.
Under this circumstance, anti-frozen protection and other protection functions are still effective.
If switch breaks, unit can run normally according settings.

■ Remote cooling/heating

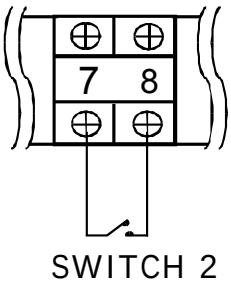

If switch 2 is closed, the unit will shift to heating mode forcibly;
If switch 2 is break, the unit will shift to cooling mode forcibly.

Note:

1. Remote shutdown and remote cooling/heating is optional function.
Choose this function by DIP switch SW4_1 (SW3_1 for 12/14/16kW) on PCB board. Factory default has not set remote cooling/heating function.
2. When the remote control and wired controller used at the same time, the unit will carry out the last command of arbitrary terminal.
3. Remote shutdown has the highest priority. In the status of remote shutdown, other controllers can’t start the unit.

■ **Remote controller**

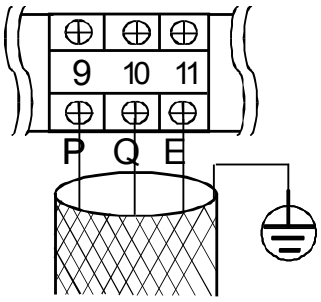

● The wired controller is optional.

● Please use 3-core shielded wire to connect the wired controller and the shielding layer must be grounded.

● When connecting wired controller, outdoor unit control panel is mainly used for display which can check parameters and inquiry, can't be used to set mode and temperature.

The Specification of Power:

Type	TMUN0010I1 TMUN0012I1	TMUN0012I3 TMUN0014I3 TMUN0016I3
Power(V/Ph/Hz))	220~240/1/50	380~415/3/50
Circuit breaker/fuse (A)	40/35	30/25
Power wire (mm^2)	3×6.0	5×4.0
Ground wire (mm^2)	4.0	2.5

⚠ **Important**

The power cord type designation is H07RN-F.

Connecting cable between indoor unit and outdoor unit shall be approved poly-chloroprene sheathed flexible cord, type designation H07RN-F or heavier cord.

The means for disconnection from a power supply shall be incorporated in the fixed wiring and have an air gap.

2. Checking and Starting Up the Unit

Preparing for first start up

Restart after shutting down for long periods.

The chiller must be started up for the first time by the Technical Service. Before starting up the chillers, make sure that:

- All safety conditions have been respected.
- The chiller is adequately fixed to the surface it rests on.
- Functional distances have been respected.
- Hydraulic connections have been carried out as indicated in the manual.
- The water circuit is filled and vented. When draining after heat pump operation, take care as the water may be hot.
- The water circuit valves are open.
- Electrical connections have been carried out correctly.
- Voltage is within a tolerance of 10% of the rated voltage for the unit.
- The unit is correctly earthed.
- All electrical and hydraulic connections are tight and have been completed correctly.

Use grommet A for the electrical power cable and grommet B for the other external wires.

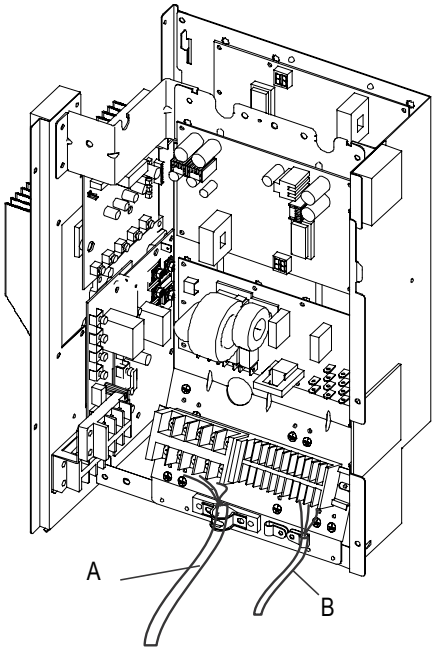

To complete the electrical connections:

- Remove the inspection panel by unscrewing the five screws. TMUN0010 for example:

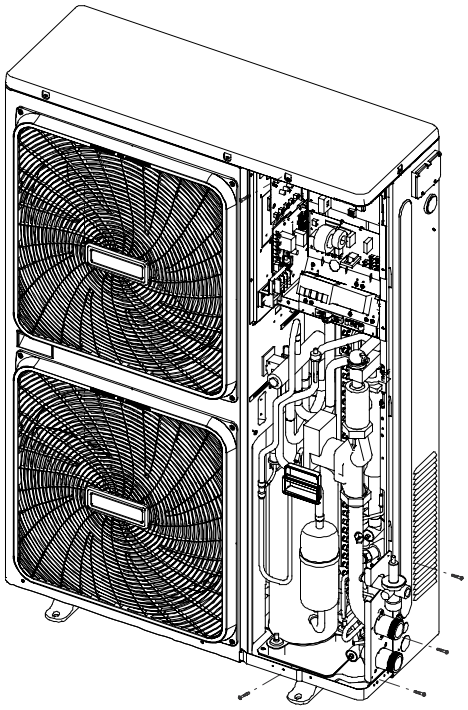

To access the control panel, open the door:

-remove the screw 1 and screw 2;

-lift the door 3.

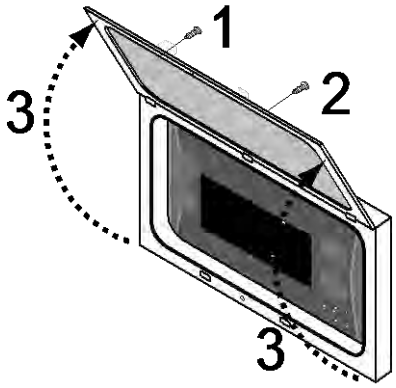

3. Running and Maintenance

3.1 Operating characteristics

Set point in cooling mode

(Factory set) = 12°C, Hysteresis = 3°C.

The compressor starts with water temperatures above 12°C.

The compressor shuts down with water temperatures of less than 9°C.

Set point in heating mode

(Factory set) = 40°C, Hysteresis = 4°C.

The compressor starts with water temperatures below 38°C.

The compressor shuts down with water temperatures above 42°C.

In the event of a temporary power failure, when power returns, the mode set previously will be retained in the memory.

Compressor start up delay

- Minimum time since last start-up 300 seconds.

Two functions prevent the compressor from starting up too frequently

Pump

The electronic board includes a pump control output. The pump starts when the assembly is powered up and at least 285 seconds before the compressor starts up and stops 120 seconds after the assembly shuts down. After the first 120 seconds of pump operation when the water flow is at full speed, the water flow alarm functions are activated (differential pressure switch and flow switch). With a pump connected to terminals PL and PN on the installer terminal board.

Fan speed control

For correct operation of the unit with different outside temperatures, the microprocessor controls the fan speed based on the pressure reading from the pressure probe, thus enabling heat exchange to be increased and/or decreased, maintaining the condensing or evaporation temperature practically constant.

The fan functions independently of the compressor.

Frost prevention alarm

To prevent the water freezing and damaging the plate heat exchanger, the microprocessor shuts down the compressor if the temperature measured by the heat exchanger outlet temperature sensor is less than 3°C. The frost prevention temperature set point can be modified by an authorized service center only and only after verifying that the water circuit contains antifreeze. Tripping of this alarm shuts down the compressor but not the pump, which remains active. To reset normal functions, the outlet water temperature must rise to more than +15°C. Reset is manual.

Water flow alarm

The microprocessor provides for management of a water flow alarm controlled by a differential pressure switch fitted as standard on the appliance to be installed on the water delivery piping.

This safety device may trip after the first 120 seconds of pump operation when the water flow is up to speed.

Tripping of this alarm shuts down the compressor but not the pump, which remains active. To reset normal functions, the alarm contact must be deactivated for at least 15 seconds.

When electrical current exceeds to setting value and condenser temperature over than 62°C, system will shut down, but not returns to normal operation until the condenser temperature decreased less than 52°C.

3.2 Routine maintenance

Never perform any cleaning operations before having disconnected the unit from the mains power supply.

If the supply cord is damaged, it must be replaced by the manufacturer or its service agent or a similarly qualified manufacturer or its service agent or a similarly qualified.

Regular maintenance is fundamental to maintain the efficiency of the unit both in terms of operation and energy consumption. The Technical Assistance Service maintenance plan must be observed, with an annual service which includes the following operations and checks:

- Filling of the water circuit.
- Presence of air bubbles in the water circuit.
- Efficiency of safety devices.
- Power supply voltage.
- Power input.
- Tightness of electrical and hydraulic connections.
- Condition of the compressor contactor.
- Efficiency of the plate heat exchanger heater.
- Checking of operating pressure, superheating and sub cooling.
- Efficiency of compressor heater.
- Cleaning of finned coil (*).
- Cleaning of fan grills.
- Cleaning of condensate drain pan (if installed).

(*) For “Heat pump” appliances, the checks are to be performed quarterly.

For units installed near the sea, the intervals between maintenance should be halved.

3.3 Extraordinary maintenance

Never perform any cleaning operations before having disconnected the unit from the mains power supply.

Chemical washing

You are recommended to chemically wash the plate heat exchanger after every 3 years of operation.

Refrigerant gas content

The chillers are filled with R410a refrigerant gas and tested in the factory. In normal conditions, there should be no need for the Technical Assistance Service to intervene to check the refrigerant gas. However, over time, small leaks may develop at the joints leading to loss of refrigerant and draining of the circuit, causing the unit to function poorly. In this case, the leaks of refrigerant must be identified and repaired and the refrigerant circuit refilled. Proceed as follows:

- Empty and dry the entire refrigerant circuit using a vacuum pump connected to the low and high pressure tap until the vacuum meter reads about 10Pa. Wait a couple of minutes and check that this value does not rise to more than 200Pa.
- Connect the refrigerant gas cylinder or a filling cylinder to the low pressure line pressure gauge connection.
- Fill with the quantity of refrigerant gas indicated on the rating plate of the unit.
- Always check the superheating and sub cooling values. In the nominal operating conditions for the appliance, these should be between 5 and 10°C and between 4 and 8°C respectively.
- After a couple of hours of operation, check that the liquid indicator indicates circuit dry (dry-green).

Important

In the event of partial leaks, the circuit must be completely emptied before being refilled.

The R410a refrigerant must only be filled in the liquid state. Operating conditions other than nominal conditions may produce considerably different values.

Seal testing or identification of leaks must only be carried out using R410a refrigerant gas, checking with a suitable leak detector.

Prohibition

1. The refrigerant circuit must not be filled with a refrigerant other than that indicated of specification.
2. The use of a different refrigerant may cause serious damage to the compressor.
3. Oxygen, acetylene or other inflammable or poisonous gases must never be used in the refrigerant circuit as they may cause explosion or poisoning.
4. Oils other than those indicated on manual before must not be used. The use of different oils may cause serious damage to the compressor.

3.4 Shutting down for long periods

If it is previewed not to use the machine for long periods

After deactivating the chiller:

-Make sure the model is in the power off model " ", or alternatively disconnect the unit from the power supply.

-Make sure the remote control switch is closed (if present) .

-Close the water valves.

Important

If there is a possibility that the outside temperature may drop below zero, there is the risk of freezing.

The water circuit MUST BE EMPTIED AND SHUT OFF POWER (when draining after heat pump operation take care as the water may be hot) or antifreeze must be added in the proportion recommended by the manufacturer.

4. Controller

4.1 Standard controller

It is built-in with the chiller at the factory.

The front panel of the device functions as the user interface and is used to perform all operations relating to the device.

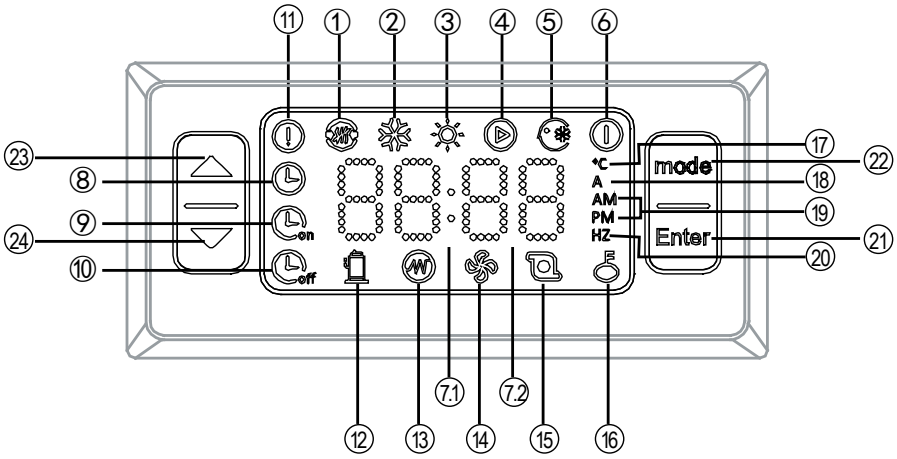

NO.	Icon	Description
①		Outside heat source running icon(Reserved)
②		Cooling mode icon This icon will be constantly light when customers choose cooling mode.
③		Heating mode icon This icon will be constantly light when customers choose heating mode.
④		Water pump mode icon This icon will be constantly light when customers choose water pump mode.
⑤		Force cooling icon This icon will be constantly light when customers choose force cooling mode.
⑥		Power off icon This icon will be constantly light when customers choose Power off mode.
⑦.1	88:88	Clock icon, "：" flash once every 1s. It will display time when customers set the timer.
⑦.2	88	The last 2 digits of the nixie tube "88" icon. If "88" is constantly light, it will display the current inlet water temperature. It's unit is ℃ .When customers do the water temperature setting, icon will display the setting water temperature. When checking, "88" will display the result of checking. When water heating is broken down or in protection, "88" display the error code and protection code.
⑧		Clock icon It will display when finish setting the clock and be extinguished when the clock setting work is done.
⑨	on	Timing on function icon on will flash when setting timing on. The icon will be constantly light when finish setting.
⑩	off	Timing off function icon off will flash when setting timing off. The icon will be constantly light when finish setting.
⑪		Breakdown light icon When the unit is broken down or under protection, this icon will flash and will be off when malfunction and protection are eliminated.
⑫		Compressor booting indicator icon When booting the compressor, this icon will be constantly light. It will be off when the compressor is shut down
⑬		E-heater booting indicator icon（Reserved） When booting the external E-heater, this icon will be constantly light. It will be off when the external E-heater is shut down.
⑭		Fan booting indicator icon When booting the fan, this icon will be constantly light. It will be off when the fan is shut down.
⑮		Water pump booting indicator icon When booting the water pump, this icon will be constantly light. It will be off when the water pump is shut down.
⑯		Key freezing icon When freezing the keys, this icon will be constantly light. It will be off when unfreezing keys.

⑰	℃	Temperature unit icon When the control panel displays temperature, this icon will be constantly light.
⑱	A	Current unit icon When the control panel displays current, this icon will be constantly light.
⑲	AM PM	Time format icon The unit is 12-hour format. "AM"will be constantly light when it is forenoon. "PM" will be constantly light when it is afternoon
⑳	HZ	Frequency unit icon It will be constantly light when the control panel displays frequency of the compressor.
㉑	Enter	ON/OFF and OK button 1. Long press "Enter" for 3S will power on or off the controller. 2. Press "Enter" to confirm the former operation when finishing the setting work.
㉒	mode	Mode choice function/Function choice/Back function button 1. Mode choice function. Choose operation mode. 2. Function choice. Long press it for 3s to enter function setting in the main interface.(Clock setting, Timing on and timing off setting) 3. Back to the previous menu. Long press it for 3s to back to previous menu in the function setting interface. Top menu is the main interface.
㉓	△	Up 1.(Value increase) 2. Forward to the previous interface.
㉔	▽	Down 1.(Value decrease) 2. Backward to the next interface.

4.1.1 Control panel operation description

1) ON/OFF

The first time to power on the unit, operation panel displays "OFF". Long press "Enter" for 3s to unlock "OFF" status and enter into standby status.

Power on: In the standby status, press "mode" to enter mode choice function. Press "mode" circularly to choose one kind of "power on" mode, the mode icon will flicker at the moment. Press "Enter" to confirm the power on mode. The unit will run as the chosen mode when the mode icon will be constantly light.

Power off: Press "mode" in the main interface to enter mode choice function and the icon which indicate the current mode will flicker. Press "mode" circularly to choose power off mode, "⏻" will flicker at this moment. Press "Enter" button to confirm the power off mode. By this time, "⏻" will be constantly light and the unit stops.

2) Mode choice and temperature settings

Press "mode" in the main interface to enter mode choice function. The "Mode" icon will flicker. Click "mode" circularly to choose a mode. The circulating order is "Cooling mode"→"Heating mode"→"Water pump mode" →"Power off mode" → "Cooling mode. The chosen mode will flicker. Press "△" or "▽" to increase/decrease the temperature in the chosen mode.

Press "Enter" to confirm power off mode and the set temperature. Mode icon will be constantly light and the unit will run as the chosen mode. Press "△" or "▽" in the main interface to increase/decrease the temperature in the chosen mode.

3) Clock setting

Long press "mode" for 3s to enter function interface. "🕒" clock icon will flicker. Press "Enter" to enter clock setting function. "🕒" icon will be constantly light and the first 2 digits on nixie tube will flicker. Press "△" or "▽" to set minute. Press "🕒" when finish setting and "Enter" will be extinguished.

4) Timing setting

a. Timing on setting

① Long press "mode" for 3s to enter function interface. "🕒" clock icon will flicker. Press "mode"again to enter timing on function. "🕒" will flicker and press "Enter" to enter timing on setting.

② At this moment, last 2 digits of the nixie tube display “01” which means the first group setting begins. Press “Enter” to the next step.

③ By this time, mode icon will flicker and press “mode” to choose timing on mode. Press “Enter” to confirm your choice and go to the next step.

④ By this time, the last 2 digits of the nixie tube will flicker and press “△” or “▽” to adjust temperature and set the temperature of the inlet water. Press “Enter” to confirm and move to the next step.

⑤ By this time, the first 2 digits of the nixie tube will flicker and press “△” or “▽” to adjust time of timing on. Press “mode” to confirm and switch to minute setting automatically. The last 2 digits of the nixie tube will flicker and press “△” or “▽” to adjust minute setting of timing on.(minimal unit of minute adjustment: 15 minutes) .

⑥ Press “Enter” to confirm. The first group setting is finished and “on” will be constantly light.

When processing the second timing setting, repeat the 1-2 operation above. When the nixie tube displays “01” and flicker, press“△” or “▽” to choose the timing on group. When the nixie tube displays “ 02 ” which means setting timing on function of the second group.

Refers the timing on setting operation of group 1 to set that of group 2.

Long press “mode” for 3s to return to the previous interface to reset the parameter during setting clock timing.

b. Timing off setting

① Long press “mode” for 3s in the main interface to enter function interface. Press “mode” circularly to enter timing off function. “Enter” will flicker and press “off” to enter timing off setting.

② At this moment, the last 2 digits of the nixie tube display “01” which means the first group setting begins. Press “Enter” to the next step.

③ By this time, the first 2 digits of the nixie tube will flicker and press “△” or “▽” to adjust time of timing off. Press “mode” to confirm and switch to minute setting automatically. The last 2 digits of the nixie tube will flicker and press “△” or “▽” to adjust minute setting of timing off. Press “off” to confirm. The first group setting is finished and “off” will be constantly light.

④ When processing timing setting of group 2, repeat the 1-2 operation above. When the nixie tube displays “01” and flicker, press “△” or “▽” to choose the timing off group. When the nixie tube displays “02”which means setting timing off function of the second group.

Refers the timing off setting operation of group 1 to set that of group 2.

c. Cancel all timing on/off settings

Long press “mode” for 3s to enter function interface. “” clock icon will flicker and press “mode” to choose the timing function. “on” and “off” flicker simultaneously means choosing to cancel all timing functions.

Press “Enter” to cancel timing settings. “on” and “off” both will be extinguished.

18.1.2 Functions of combination key

Force cooling function

Press “▽” and “mode” simultaneously for 3s in the main interface to enter into force cooling mode. The force cooling mode icon will be constantly light.

Press “▽” button and “mode” button simultaneously for 3s to quit force cooling mode. The unit will enter power off mode automatically when quitting force cooling mode.

Parameter query function

Press " △ " and " ▽ " simultaneously for 3s to enter into the interface of parameter query function. At this moment, first 2 digits of the nixie tube " 88:88 " will display sequence number and the last 2 digits is specific parameters. Press " △ " or " ▽ " to query the relative parameters.

When enter the parameter query, it will quit automatically and return to the main interface. Press " △ " and " ▽ " simultaneously to quit parameter query manually.

Checking content table (for control panel and wired controller check)

Order	Contents
01	Frequency
02	Running mode: 0-Power off，1-water pump，2-cooling，3-heating，4-force cooling
03	Fan speed: 0-Shutdown,1~7-Fan speed.
04	Total capacity requirements. Capacity before revised(Force cooling displays 5)
05	The revised capacity requirements. (Force cooling displays 5)
06	Cooling/heating temp. setting.
07	T3 temperature value (Outlet temperature of outdoor heat exchanger)
08	T4 temperature value (Outdoor environment temperature)
09	Tp temperature Value (Discharge refrigerant temperature)
10	Tin temp. Value (Inlet water temperature)
11	Tout temp. Value (Outlet water temperature)
12	Tb1 temp. Value (Temperature 1 of heat plate)
13	Tb2 temp. Value (Temperature 2 of heat plate)
14	T6 temp. Value (Reserved , Cooling fin surface temperature）
15	Outdoor unit operation current
16	Power supply voltage AD value
17	Electronic expansion valve opening steps(Step number *8)
18	The last error cord
19	The second error cord
20	The first error cord

4.1.3 Auto-lock (unlock) function

If don't operate the controller in 60s, the keyboard will lock automatically. Press "mode "and "Enter" simultaneously for 3s to unlock.

4.1.4 Factory Reset

In main interface, long press "Enter" for 3s, the unit will close and recovers to factory default mode. Display panel will display "OFF".

4.2 Optional wired controller (KJR-120F/BMK-E, KJR-120F1/BMK-E)

Features

Touch key operation; LCD displays operation parameters; Multiple timers; Real-time clock (battery life: 5~8 years).

4.2.1 Overview

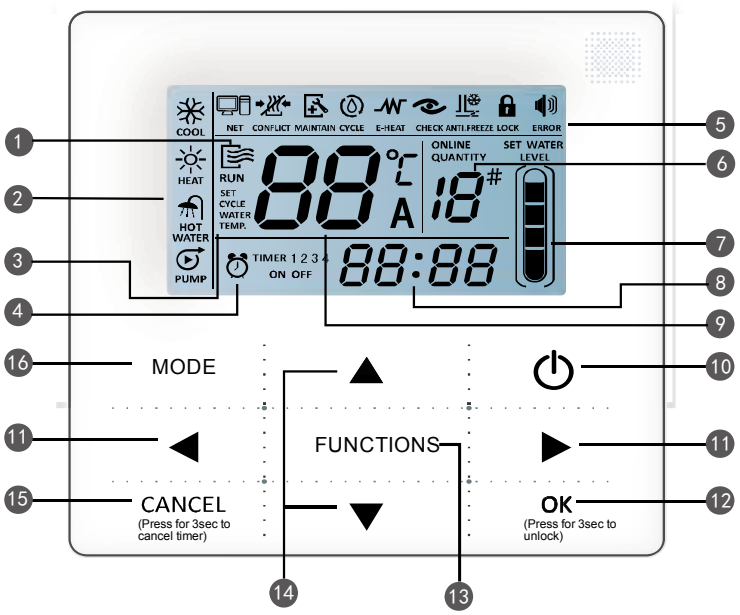

①.Operation icon	⑨.Water temp.
②.Code area	⑩.ON/OFF Key
③.Setting temperature	⑪.Left Right Key
④.Timing On/Off	⑫.Confirm Key
⑤.Function Icon	⑬.Function key
⑥.Unit number	⑭.Add and Reduce key
⑦.Water Level Indication (reserved)	⑮.Cancel key
⑧.Clock	⑯.Mode key

1. Operation icon: Indicate unit ON and OFF status; the icon displays when the unit is on and does not display when the unit is off;
2. Mode area: Indicate the main unit operating mode; details refer to its' manual;
3. Setting temperature: 2 status can be displayed: WATER TEMP. | SET WATER TEMP. ;
4. Timing ON/OFF indication TIMER 1 2 3 : Indicate the timing information; details refers to page 10 of the manual;

5. Function icon

1) NET : Displays when the unit controlled by remote switch;

2) CONFLICT : The conflict icon.

3) MAINTAIN : Displays when the unit is needed. Press and hold "MODE" key for 3 seconds to cancel the icon and timing will restart until next maintenance;

4) CYCLE : The reserved icon. ;

5) E-HEAT : The reserved icon. ;

6) CHECK : Displays when check function is on; details refers to the manual;

7) ANTI.FREEZE : Displays when ambient temperature is low which means the main unit need anti-freezing action;

8) LOCK : Displays when no key operation for 2 minutes and all keys are locked. Press and hold “OK” key for 3 seconds to unlock;

9) : Displays when error or protection occurs and means the unit need maintenance by professionals.

6The unit number: The user can set the number; details refer to page 16 of the manual;
7. Water level indication: The reserved icon;
8. Clock: Under normal status displays clock; Under timing setting displays the setting timing, details refer to page 15 of the manual;
9. Water temperature: Under normal status display water temperature; Under water temperature setting status displays the setting value; Under check status displays check parameter, details refer to Page 9, 18 of the manual;
10. ON/OFF key: Turn on and turn off functions, details refer to page 7 of the manual.
11. Right and Left key: Press these keys to check setting water temperature; Press right key to shift to the next step setting under timing setting status; Press these keys to turn over the unit parameter information under check status;
12. OK key: Press this key to confirm settings. Press and hold this key for 3 seconds to unlock under locking status;
13. Function key: Setting water temperature, timing and clock etc., details refer to Page 9-17; Press and hold this key for 3 seconds to enter check status, details refer to page 18 of the manual;
14. Add and Reduce key: Move up or move down values of temperature, timing etc;
15. Cancel key: Press this key to cancel parameter setting under setting status; Press and hold this key for 3 seconds to cancel timing when timing is valid;
16. Mode key: Power on the cooling function, heating function or water pump function, details refer to Page 8 of the manual.

4.2.2 Operation instructions

a. Turn On and Turn Off the main unit

1) Press the On/Off key to control On and Off status of the main unit.
2) Under Off status, press the On/Off key “⏻ ” to run the main unit, at that time the LCD of wired controller will display the operation icon “RUN ”. The main unit will running as the current setting of the wired controller.
3) Under On status, press the On/Off key “⏻ ” to turn off the main unit and the operation icon “RUN ” on the LCD will disappear.

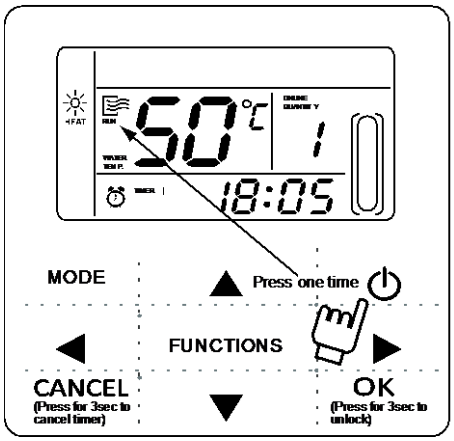

b. Setting operating mode and function parameters

1) Setting operating mode and water temperature

Setting operating mode: Press “MODE” key to choose operation mode. The setting mode will change as the following order each time the key is pressed:

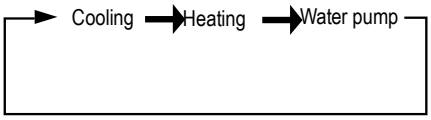

Press “OK” key or wait for 7 seconds to confirm. During the setting process, pressing the “CANCEL” key to exit without saving.

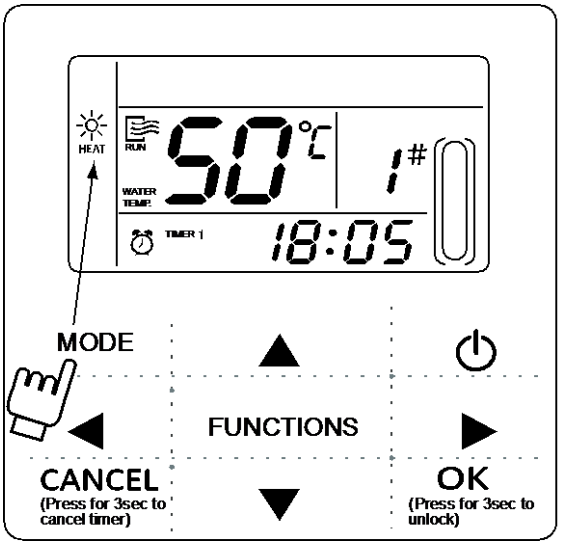

2) Setting water temperature:

Method 1: Press the “▲” or “▼” to adjust the water temperature after the controller is powered on. Press “OK” key or wait for 7 seconds to confirm.

Method 2: Setting water temperature in parameters function. Press “FUNCTIONS” key under main interface once to enter water temperature setting interface. Press the “▲” or “▼” to adjust the water temperature .Press “OK” key or wait for 7 seconds to confirm.

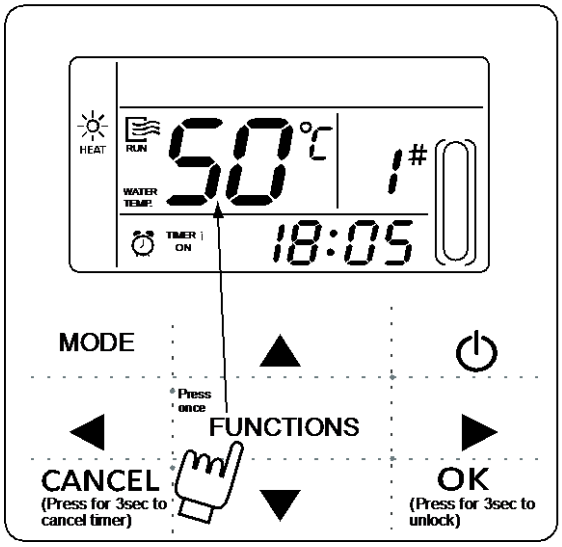

Water temperature setting check: To check the water temperature setting value, press the “◄” or “►”key under the main page(the page displayed after the controller is powered on).

c. Setting function parameters

Press “FUNCTIONS” key to choose operation parameters. The setting function parameters will change as the following order each time the key is pressed:

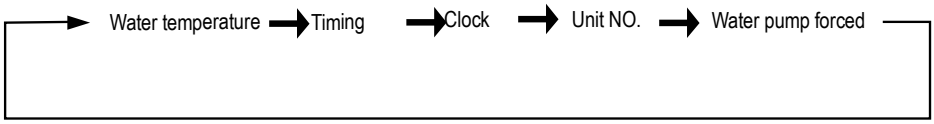

1) Timing setting: 3 timing periods can be set on the wired controller: Timer 1, Timer 2, Timer 3. These 3 timers can control the main unit to be turned ON and OFF 3 times at most during a day.

2) Setting method: press “FUNCTIONS” key under main page twice to enter timing setting. Then the LCD will display as the following:

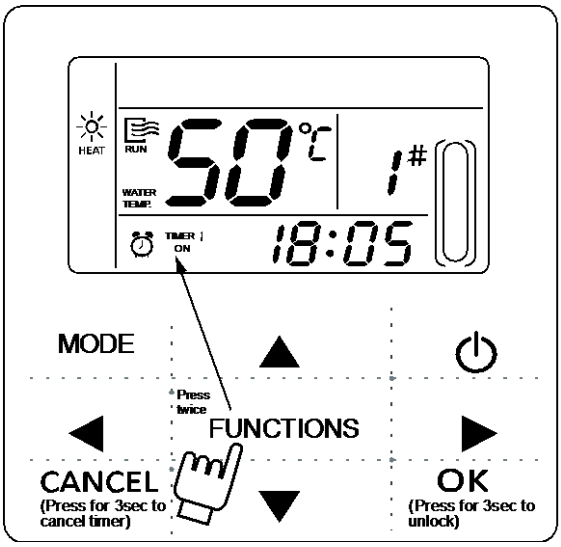

At this time the hour of the clock will flash, which means the current setting is the hour of Timer 1 “On”, press the “▲” or “▼” to adjust, press “►” key when finished, and then the minute of the clock will flash, which means the current setting is the minute of Timer 1 “On”, press the “▲” or “ ▼ ” to adjust, press “► ” key when finished, the LCD will display as the following:

At this time the hour of the clock will flash, which means the current setting is the hour of Timer 1 “Off”, press the “▲” or “▼” to adjust, press “► ” key when finished, and then the minute of the clock will flash, which means the current setting is the minute of Timing 1 “Off”, press the “▲” or “▼” to adjust, press “► ” key when finished, the LCD will display as the following:

At this time the hour of the clock will flash, it means the current setting is the hour of the Timer 2 “On”. And the follow setting method will be the same as the Timer 1. Similarly, the setting of Timing 3 is the same as this method. After setting is finished, press “OK” key or wait for 7 seconds to confirm the setting,

and the LCD will display the effective timing information, as the following display: TIMER 1 2 3

Example of Timing setting

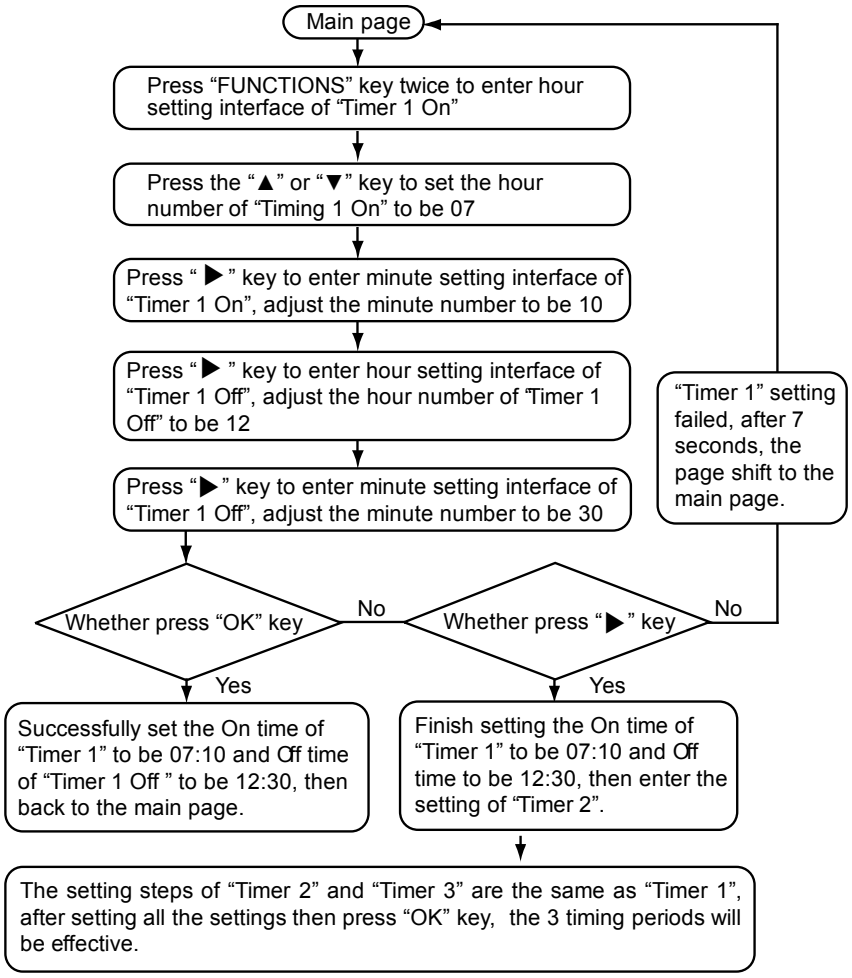

During any period of timing setting to press "OK" key , the timing periods which have been set will be effective (only if the "On" and "Off" of one timing period have been set, the setting is effective).

Check timing information: to check the timing which has been set, press "◄" or "► " key under main page, the "On" and "Off" time of Timer1, Timer 2 and Timer3 will be displayed in turns.

Cancel timing: press and hold "CANCEL" key for 3 seconds, then all the effective timing periods will be cancelled.

Note: Correct: To avoid timing error, each period of timing should not be crossed. E.g.:

Correct:

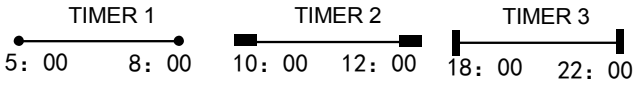

Wrong:

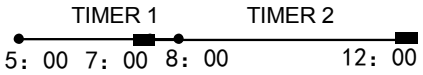

d. Setting clock

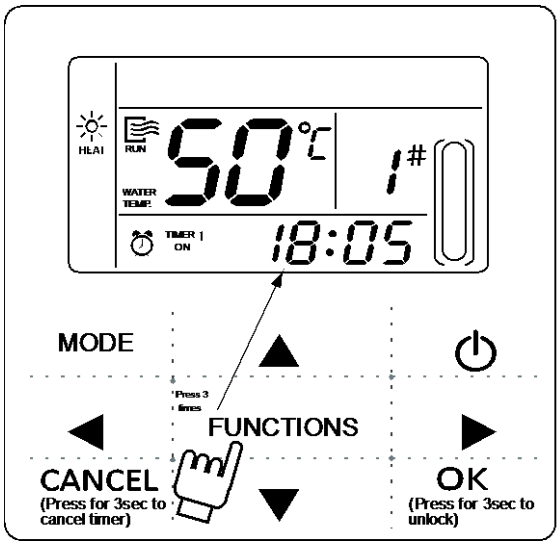

Press the "FUNCTION" key 3 times to enter clock setting. The hour of the clock will flash, which means the current setting is the hour of the clock, press the "▲" or "▼" to adjust, press "► " key when finished, and then the minute of the clock will flash, it means the current setting is the minute of the clock, press the "▲" or "▼" to adjust, press " OK " key when finished or wait for 7 seconds to confirm. During the setting process pressing the "CANCEL" key to exit without saving.

NOTE: To get the correct timing On and timing Off time, please correctly set the clock!

e. Setting unit number

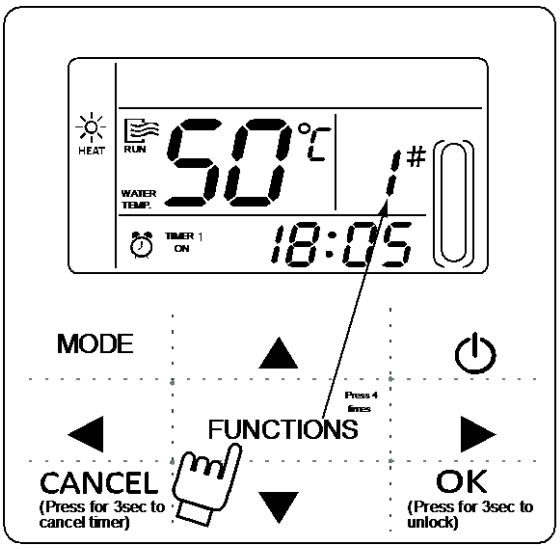

Press the "FUNCTIONS" key 4 times to enter the unit number setting. Press "▲" or "▼" to adjust the unit number. press " OK " key when finished or wait for 7 seconds to confirm. During the setting process pressing the "CANCEL" key to exit without saving. The setting value is 0-18.

f. Force opening water pump

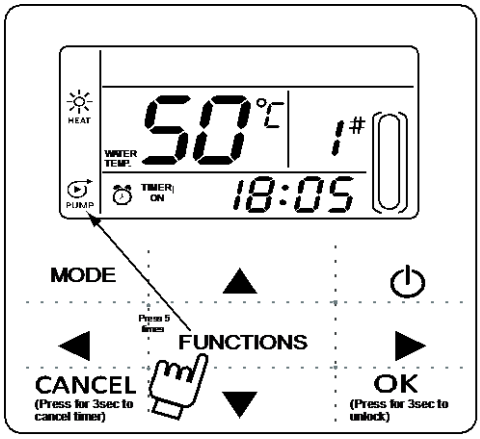

Press the “FUNCTIONS” key 5 times to force open the water pump. The water pump icon will flash.

Press “OK” key to confirm. During the setting process, pressing the “CANCEL” key to exit without saving.

Note:

a. Forcing water pump function is only limited to stand-by mode, others modes not response.

b. Under forcing water pump function, other settings will not responsible, except stopping

c. When communication disconnects, it will show E2 error in 2 minutes, the wired controller will automatically cancel the forcing water pump function; while connected, the wired controller keeps synchronizing with the unit(If forcing water pump function is still on-going, the controller keeping showing its status).

d. The outdoor unit does not response after activating the forcing water pump function, (eg: forcing water pump function cannot be activated under forcing heating in stand-by mode),the function will be automatically stopped if it is not activated within 5 minutes.

4.2.3 Checking function

1) Check function allows the user to check all the operating parameters, error and protection information of the unit.

2) Entering method: press and hold “FUNCTIONS” key for 3 seconds to enter check interface, as the figure display:

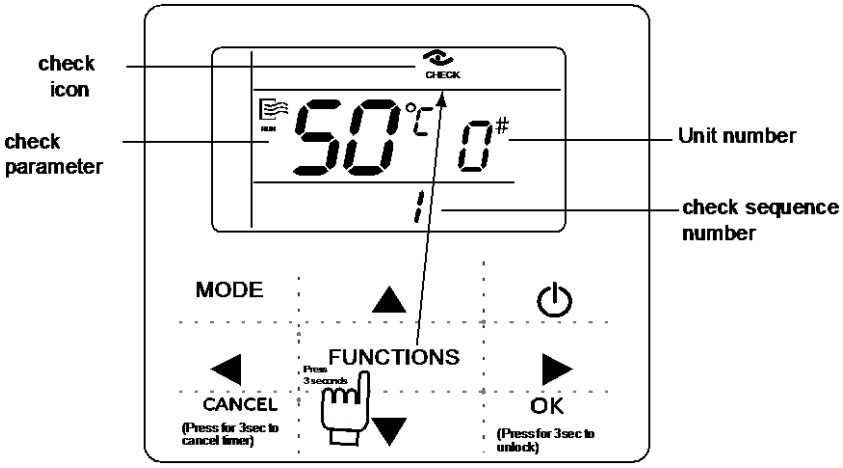

3) Press “◄ ” or “►” to check all the status information of the unit.

Check content when wired controller setting is 1. The checking content is the same as the control panel checking (Check list in page 60).

TRUST

Air Conditioning Systems

Cooling & Heating

TRUST AIR-CONDITIONING EQUIPMENT CO.
Shiraz office: 8 th floor, Alvand Blog., Dostan St.,
Moaliabad Ave., SHIRAZ, IRAN., Post code: 71877-14446
Tel.: +98-71-36341070
Fax.: +98-71-36341094
Tehran office: No. 19- koohe nour St.- Motahhari St.-
TEHRAN, IRAN., Post code: 15876-73111
Tel.: +98-21-89389
Fax.: +98-21-88541903
Ahwaz office: No. 309- Kaveh St.- AHWAZ, IRAN., Post code: 61939-47911
Tel.: +98-61-32230647-8 **E-mail: info@trustacs.com**
Fax.: +98-61-32230647 **Web site: http://www.trustacs.com**

برند برتر در اولین جشنواره بین‌المللی
برترین نام و نشان‌های تجاری ایران

ISO 9001 REGISTERED
DNV
MGMT. SYS.
RvA C 024
DNV Certification B.V., The Netherlands