TRUST
Air Conditioners

AIR HANDING UNIT

TRUST AIR CONDITIONING EQUIPMENT CO.
Prepared By: Engineering & R & D Department.

Shiraz- May 2017

TRUST
Air Conditioners

Electric Air Handler

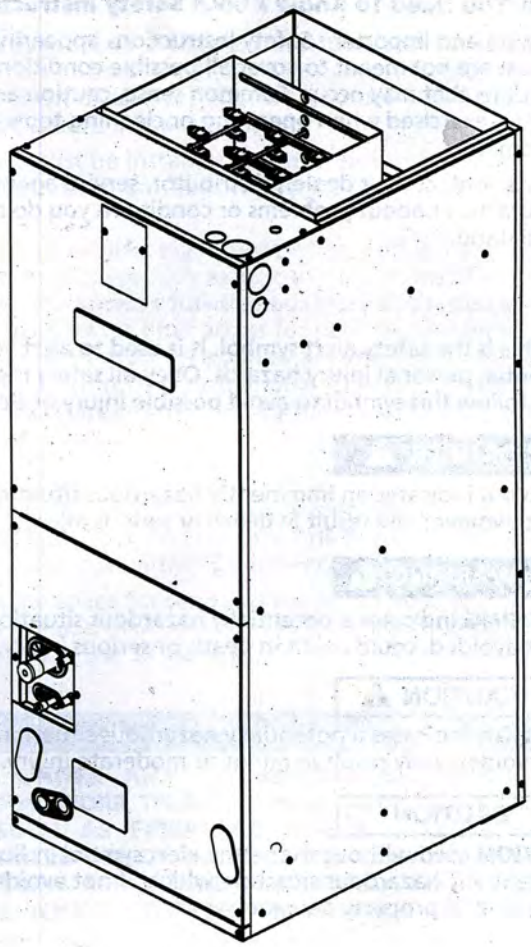

TABLE OF CONTENTS

NOTE:

THESE INSTRUCTIONS ARE INTENDED AS AN AID TO QUALIFIED SERVICE PERSONNEL FOR PROPER INSTALLATION, ADJUSTMENT AND OPERATION OF THIS EQUIPMENT. READ THE ENTIRE INSTRUCTION MANUAL THOROUGHLY BEFORE ATTEMPTING INSTALLATION OR OPERATION.

RECOGNIZE SAFETY SYMBOLS, WORDS AND LABELS

What You Need To Know About Safety Instructions

Warning and Important Safety Instructions appearing in this manual are not meant to cover all possible conditions and situations that may occur. Common sense, caution and care must be exercised when operating or cleaning tools and equipment.

Always contact your dealer, distributor, service agent or manufacturer about problems or conditions you do not understand.

⚠ This is the safety alert symbol. It is used to alert you to potential personal injury hazards. Obey all safety messages that follow this symbol to avoid possible injury or death.

⚠ DANGER ⚠

DANGER indicates an imminently hazardous situation which, if not avoided, will result in death or serious injury.

⚠ WARNING ⚠

WARNING indicates a potentially hazardous situation which, if not avoided, could result in death or serious injury.

⚠ CAUTION ⚠

CAUTION indicates a potentially hazardous situation which, if not avoided, may result in minor or moderate injury.

CAUTION

CAUTION used without the safety alert symbol indicates a potentially hazardous situation which, if not avoided, may result in property damage.

⚠ WARNING ⚠

IMPROPER INSTALLATION, ADJUSTMENT, ALTERATION, SERVICE OR MAINTENANCE CAN CAUSE INJURY, PROPERTY DAMAGE OR LOSS OF LIFE. READ THIS MANUAL COMPLETELY BEFORE BEGINNING ANY WORK AND FOLLOW ALL SAFETY PRECAUTIONS.

A QUALIFIED INSTALLER MUST PERFORM INSTALLATION AND SERVICE.

DO NOT DESTROY THIS MANUAL. PLEASE READ CAREFULLY AND KEEP IN A SAFE PLACE FOR FUTURE REFERENCE BY A SERVICE TECHNICIAN.

THESE INSTRUCTIONS ARE INTENDED AS AN AID TO QUALIFIED SERVICE PERSONNEL FOR PROPER INSTALLATION, ADJUSTMENT AND OPERATION OF THIS COMPONENT. READ THESE INSTRUCTIONS THOROUGHLY BEFORE ATTEMPTING INSTALLATION OR OPERATION. FAILURE TO FOLLOW THESE INSTRUCTIONS MAY RESULT IN IMPROPER INSTALLATION, ADJUSTMENT, SERVICE OR MAINTENANCE, POSSIBLY RESULTING IN FIRE, ELECTRICAL SHOCK, PROPERTY DAMAGE, PERSONAL INJURY OR DEATH.

BEFORE PERFORMING ANY WORK ON THIS EQUIPMENT, POWER SUPPLY MUST BE TURNED OFF AT THE HOUSEHOLD SERVICE BOX TO AVOID THE POSSIBILITY OF SHOCK, INJURY, DAMAGE TO EQUIPMENT, OR DEATH.

DO NOT STORE OR USE GASOLINE OR OTHER FLAMMABLE VAPORS AND LIQUIDS, OR OTHER COMBUSTIBLE MATERIALS IN THE VICINITY OF THIS AIR HANDLER OR ANY OF ITS MATCHING SYSTEM COMPONENTS (CONDENSING UNIT, HEAT PUMP OR FURNACE).

NOTES TO INSTALLER

The words "SHALL" and "MUST" indicate a requirement which is essential to satisfactory and safe product performance. The words "SHOULD" and "MAY" indicate a recommendation or advice which is not essential and not required but which may be useful or helpful.

The instructions are for the use of qualified individuals specially trained and experienced in the installation of this type equipment and related system components.

Installation and service personnel are required by some locales to be licensed. Persons not qualified shall not install this equipment nor interpret these instructions.

INTRODUCTION

Models A*PB and Plare designed for flexibility and can be used for upflow, horizontal or downflow applications. These units are available for systems of 18,000 through 60,000 BTUH nominal cooling capacity. Factory authorized electric heater kits are available in 5 kW through 20 kW sizes. See product specifications for available accessory kits.

INSPECTION AND UNPACKING

A thorough inspection of the shipping container must be made immediately upon receiving your unit. Look for any punctures or openings, and if it appears damage has occurred, note it on the freight bill before signing. Contact delivering carrier immediately to inspect damage. Do not begin installation work should begin until this inspection is completed.

INSTALLATION

Codes

The installer must comply with all local, state and federal codes and/or regulations pertaining to this type of equipment and its installation. Such codes and/or regulations shall take precedent over any recommendations contained herein. If there are no local codes on the subject, installations shall be made in accordance with the National Electrical Code (NEC) and recommendations made by the National Board of Fire Underwriters.

Power Considerations

The installer shall check available power to make certain it matches the unit name plate rating and that constant voltage can be maintained on the unit. Unsatisfactory performance or a possible hazard could otherwise result. The local power company should be contacted with questions concerning power supply.

Electric Heater Kits

Only EEB/EEC series electric heater kit may be installed into the air handler. See Electric Heat section on page 12 for more information.

Location

All models are approved for alcove, closet, and attic installatic in the upflow, downflow or horizontal position. Refer to th applicable section of this manual on pages 3-5 for specif installation instructions on each position.

The air handler must be installed in a level position and shou be located for ease in connecting air duct with proper a distribution.

Exterior surface of cabinet may sweat when unit is installed non-air-conditioned space such as attic or garage. Installer mu provide protection such as full-size auxiliary drain pan on a units. Be sure to allow for filter access for periodic user servicin In addition, caulking must be applied around the power ar control wires entering the control box. This will prevent a leakage into and condensate from forming inside the contr box.

Clearances

Clearances from the air handler to the combustibles are ze inches from all sides, top, and bottom; one inch from dischar air plenum; and the duct within 36 inches of the plenum.

Provide adequate space for servicing the air handler; at least inches. All service and maintenance can be performed from t front access doors of the air handler.

⚠ WARNING ⚠

DO NOT, UNDER ANY CIRCUMSTANCES, CONNECT RETURN DUCTWORK TO ANY OTHER HEAT-PRODUCING DEVICE SUCH AS FIREPLACE INSERT, STOVE, ETC UNAUTHORIZED USE OF SUCH DEVICES MAY RESULT IN FIRE, CARBON MONOXIDE POISONING, EXPLOSION PERSONAL INJURY, OR PROPERTY DAMAGE.

Upflow Applicaton

In an upflow application normally a duct is employed as a return air means as shown in Figure 1 below or a platform is installed as in Figure 2.

1 Upflow Installation With Return Duct

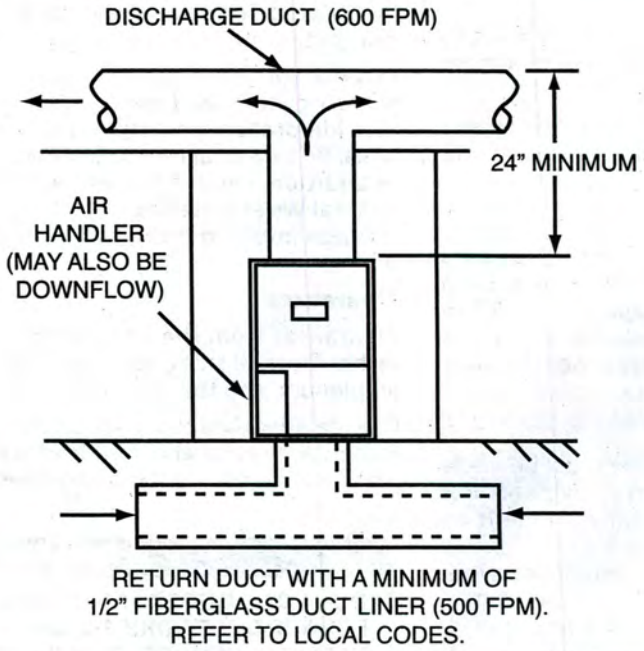

2 Upflow Installation With Return Platform

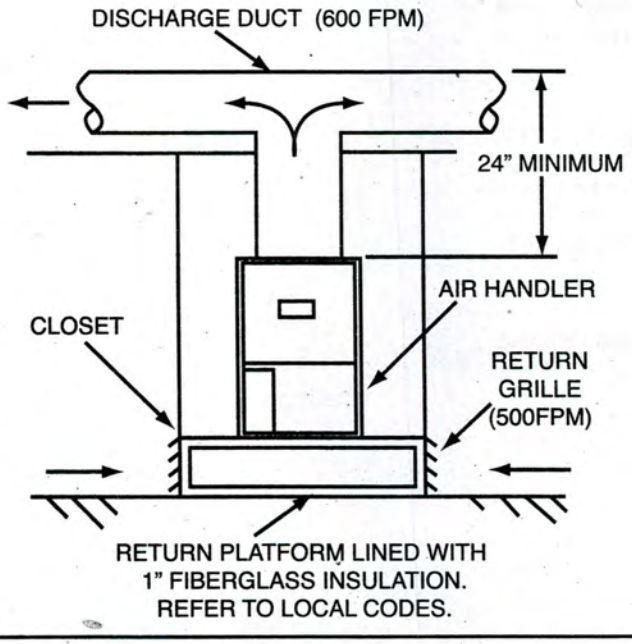

Horizontal Application

This type of position is usually used in an attic or crawl space. The air handler may be laid on the left or right side for horizontal applications. The factory-installed coil is intended for left-side-down installation.

This type of installation requires a return air duct to be attached to the air handler inlet. The opposite end of the return air duct is then routed to a return air grille mounted to the ceiling or wall. This duct MUST be no smaller than the inlet opening of the air handler.

For Horizontal Right Application:

1. Remove front panels from the air handler.
2. Remove coil assembly from the air handler.
3. Remove horizontal drain pan from left hand side of air handler and re-install on right hand side. Change splash baffle location from left hand to right hand side of drain pan flange.
4. Remove the horizontal coil support bracket from the right hand side of the air handler.
5. Reinstall coil assembly in the air handler.
6. Reattach coil support bracket to the left hand side of the air handler.
7. Replace front panels.

⚠ CAUTION ⚠

Horizontal applications in unconditioned areas, such as attics above a ceiling, require special precautionary measures. An auxiliary drain pan having at least two inches overall clearance around the unit MUST be field-fabricated and installed as shown below.

The drain outlet and drain line for the auxiliary drain pan need not be trapped but should be sloped to a suitable drain.

⚠ CAUTION ⚠

For optimum condensate drainage performance in horizontal installations, unit should be leveled along the length and width. Failure to follow this caution may result in product or property damage.

⚠ CAUTION ⚠

A P-type trap must be installed in the primary drain line as shown in figure 3 below.

3 Horizontal Installation

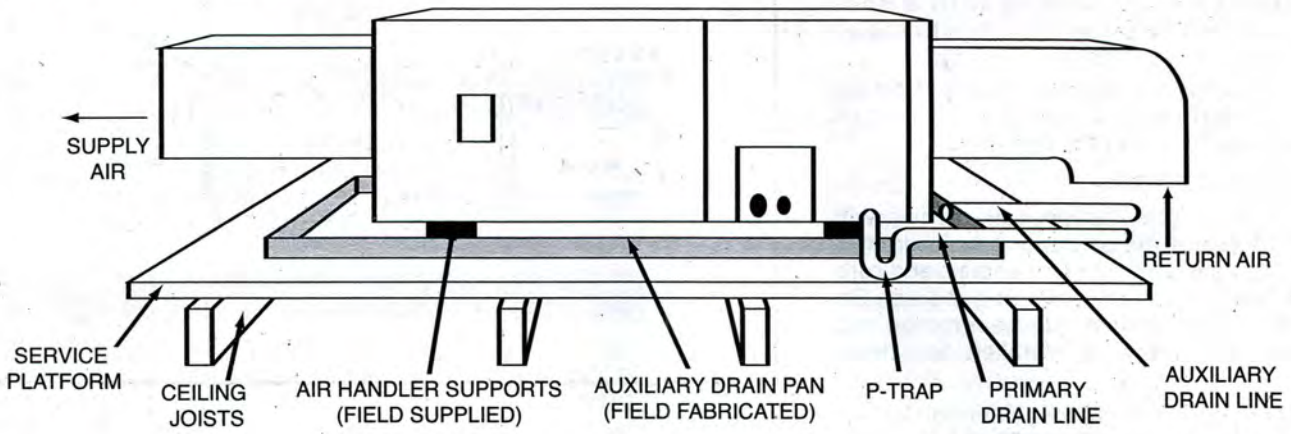

Downflow Application

Relocating Coil

⚠ CAUTION ⚠

The coil MUST be relocated for downflow application.

1. Remove coil access door.
2. Slide coil out of air handler.
3. Remove coil rack from air handler by removing screws from side of air handler.
4. Relocate rack in air handler as shown in Figure 4 using screws from side of air handler.
5. Turn air handler into downflow position.
6. Slide refrigerant coil into air handler.
7. Reverse and replace air handler door(s).

Installation Considerations

- No downflow sub-base is required with this air handler, however, local codes may require the use of a non-combustible sub-base when used with electric heater kit.
- An "L" or "T" shaped duct enclosure MUST be used as a supply plenum. No registers or outlets SHALL be located directly below the air handler supply outlet.
- Size and frame the floor opening as shown in Figure 5. Refer to the Dimension drawing on page 10. Care MUST be taken not to overcut the floor opening.
- Caulk around the floor opening with a non-flammable caulk such as silicone. Set the air handler in place and secure the air handler properly.
- Allow access to the low voltage connection by building the platform so that there is a minimum of 5 1/2" between the floor and the unit flange.

Return Air Filter Clearance

On downflow applications, certain coil models will protrude from the top of the air handler (coils greater than 15" tall on A24 through A36 air handlers and coils greater than 18" on A42 through A60 air handlers). On these models, the return air filter may be removed and a separate filter grille may be installed for closet applications.

If this method is not desirable, cabinet extension kit No. 65-1647 for A24, A30, and A36; or No.65-1649 for A42, A48, and A60 may be ordered. The extension kit screws to the side of the air handler and extends the length of the air handler coil cabinet. In addition, the kit includes a filter compartment and door.

Emergency Drain Opening

The indoor coil emergency drain opening must be used for this application. Refer to page 8 for instructions on condensate tubing.

4 Relocating Coil for Downflow Position

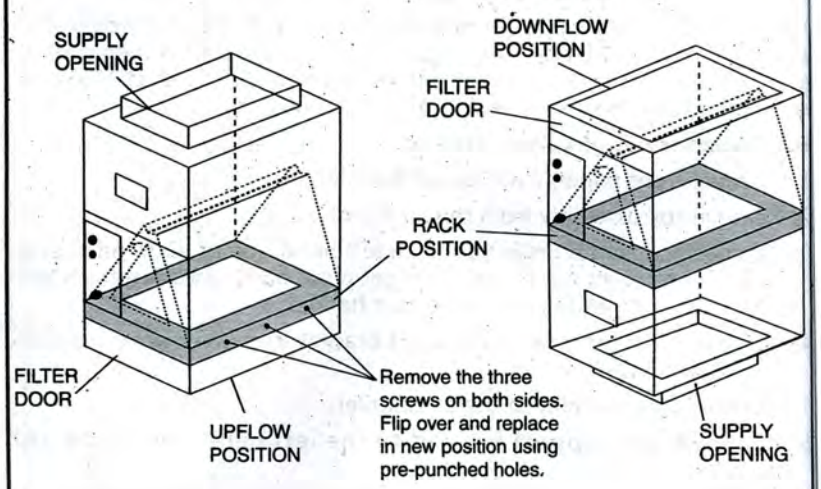

5 Supply Plenum Floor Opening

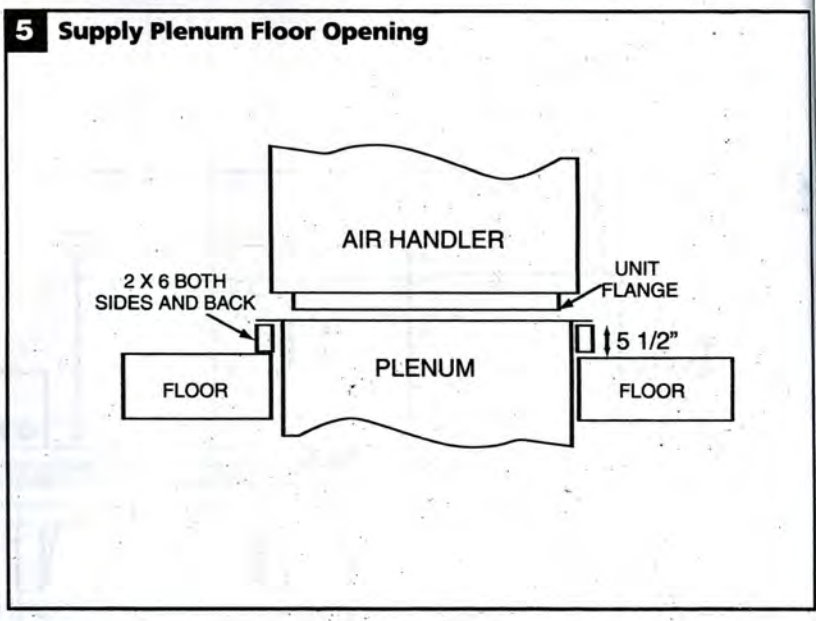

Connect Refrigerant Piping

Use field supplied tubing of refrigerant grade. Suction tube must be insulated. Do not use damaged, dirty, or contaminated tubing because it may plug refrigerant flow control device. ALWAYS evacuate the coil and field supplied tubing before opening outdoor unit service valves.

Factory and Field-Installed Expansion Valves

1. The bulb and capillary tubing should be routed outside of the case. Make sure the capillary tube will not contact any sharp edges of the case. On factory installed expansion valves, the adjustable sensing bulb is not permanently installed onto the coils' vapor line in order to allow easy removal during installation.

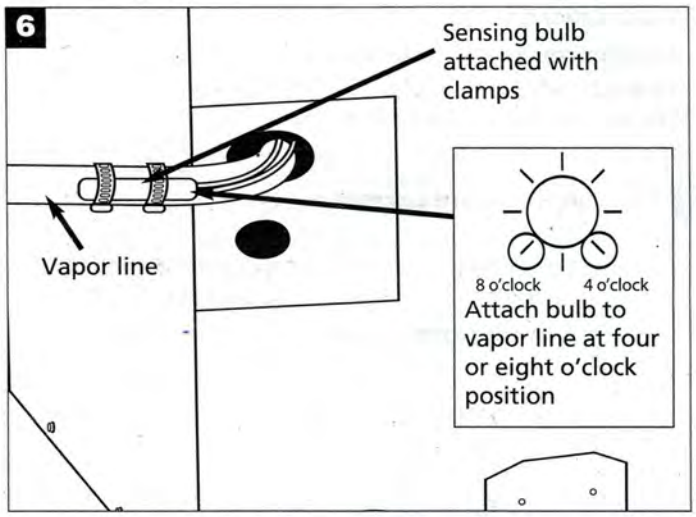

⚠ CAUTION ⚠

THE TXV VALVE CAN BE DAMAGED BY EXTREME HEAT. PROPER PRECAUTIONS SHOULD BE TAKEN TO AVOID OVERHEATING THE TXV VALVE AND CAUSING DAMAGE TO THE INTERNAL COMPONENTS.

⚠ CAUTION ⚠

THE TXV SENSING BULB CAN BE DAMAGED BY EXTREME HEAT FROM BRAZING. THE BULB SHOULD BE REMOVED BEFORE PERFORMING ANY BRAZING PROCEDURE AND NOT INSTALLED UNTIL AFTER THE VAPOR AND LIQUID LINES ARE BRAZED AND LEAK CHECKED.

2. To assure accurate sensing and the best performance the bulb should be placed on a horizontal section of the vapor line at the four or eight o'clock position and at least 6" from the coil manifold.

⚠ WARNING ⚠

ALWAYS HAVE A FIRE EXTINGUISHER AVAILABLE WHEN WORKING WITH AN OPEN FLAME.

ALWAYS USE SAFETY GLASSES, PROTECTIVE CLOTHING, AND WORK GLOVES.

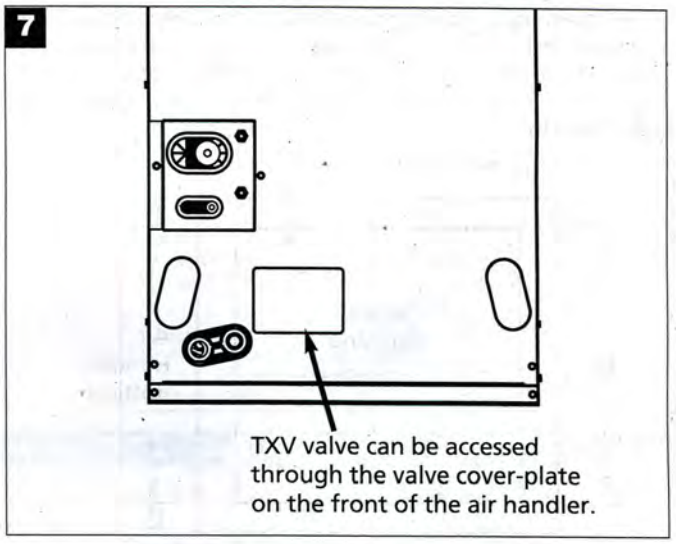

3. Attach the bulb securely with the copper strap provided.
4. Insulate the bulb thoroughly with a suitable insulation material such as cork tape.
5. Coils with TXVs should be charged 10-12 degrees (+ or – one degree) of sub-cooling. This supercedes any subcooling value listed with condensing unit's literature.

   For the majority of installations no adjustment to the TXV setting is required. However, if the measured superheat is less than 4° or greater than 8° an adjustment is required. The adjustment stem is at the base of the valve under the flare nut. To increase superheat, tighten the stem clockwise and to decrease superheat, back-out the stem counter-clockwise. Use a 1/4" refrigeration service wrench for this function.

NOTE:

When removing refrigerant, always use standard reclaim procedures.

Ductwork

This air handler shall not be installed without supply plenums and proper ducting. Connect supply air duct over 1/2" flanges on supply air opening. Secure duct to flange and seal connection. Use flexible connectors between ductwork and unit at discharge connection. Ductwork passing through unconditioned space must be insulated and covered with vapor barrier.

Return Air Ducting

The dimensions of the return air duct or platform must be at a minimum the same size as the return air opening on the air handler, regardless of the air handler position.

When framing a return air platform, the opening size should be as shown below. If the air handler is to be installed in a closet, be sure to allow room for wiring and refrigerant lines.

8 Top View

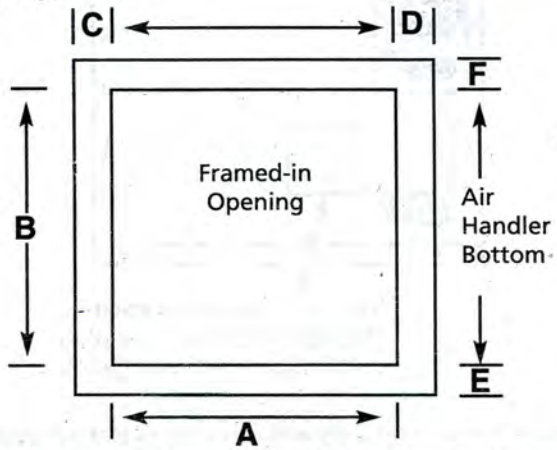

MODEL	A		B		C		D		E		F	
	IN	CM	IN	CM	IN	CM	IN	CM	IN	CM	IN	CM
RB01-TFB36*	14	37.3	14 1/4	36.2	2	5	2	5	4	10.1	4	10.1
RB01-TFB48*	16 3/8	41.6	22 1/4	56.5	3	7.6	3	7.6	1 3/4	4.4	2	5
RB01-TFB60*	16 3/8	41.6	22 1/4	56.5	3	7.6	3	7.6	1 3/4	4.4	2	5

Return Air Platform Height

If the air handler is to be used in the upflow position, the height of the return air platform should be no smaller than the height listed below for the specific model of air handler.

Model	Platform Height	
	Inches	Cm
RB01-TFB36DXN02/S00N12NNW1A01	14	35.6
RB01-TFB48DXN02/S00N12NNW1B01	16	40.6
RB01-TFB60DXN02/S00N12NNW1B01	18	45.7

LINE VOLTAGE CONNECTIONS

⚠ WARNING ⚠

BEFORE PERFORMING ANY WORK ON THIS EQUIPMENT, POWER SUPPLY MUST BE TURNED OFF AT THE HOUSEHOLD SERVICE BOX TO AVOID THE POSSIBILITY OF SHOCK, INJURY, DAMAGE TO EQUIPMENT OR DEATH.

1. The power supply can be connected through the right si or top of the air handler. Conduit knockouts are provid for 1/2", 3/4", 1", and 1 1/4" conduit.
2. Refer to the Control System section for recommended lo voltage wire gauges.
3. See Power Supply Table on page 9 for power supp specifications.
4. Use only copper conductors for supply wiring.
5. The air handler must be permanently ground The ground lug is located in the field wiring box.

9 Conduit Knockout Locations

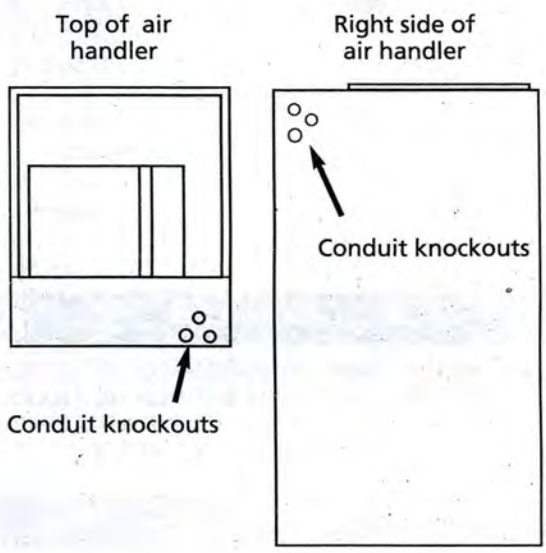

10 Grounding Lug Location

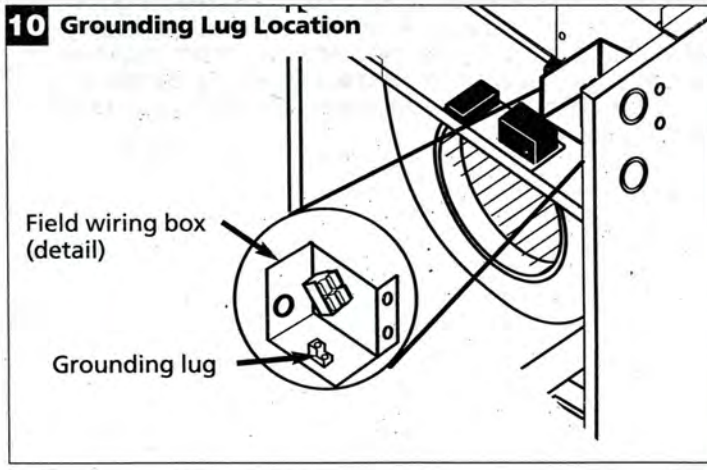

24 VOLT CONTROL SYSTEM

⚠ WARNING ⚠

BEFORE PERFORMING ANY WORK ON THIS EQUIPMENT, POWER SUPPLY MUST BE TURNED OFF AT THE HOUSEHOLD SERVICE BOX TO AVOID THE POSSIBILITY OF SHOCK, INJURY, DAMAGE TO EQUIPMENT, OR DEATH.

⚠ WARNING ⚠

IMPROPER INSTALLATION OF THE ELECTRICAL WIRING OR THE HEAT ASSEMBLY MAY RESULT IN FIRE, SERIOUS PERSONAL INJURY, OR DEATH.

Connection to unit

Wire low voltage in accordance with wiring label on the blower. Use no. 18 AWG wire to make the low voltage connections between the thermostat, the unit, and the outdoor equipment.

If the thermostat is located more than 100 feet from the unit use 16 AWG wire. All wiring must be NEC Class 1 and must be separated from incoming power leads.

The thermostat preheat anticipator should be adjusted to match the current listed below for the EEC model heat assembly to be installed.

THERMOSTAT TYPE		EEC HEATER MODEL				
		5	7.5	10	15	20
SINGLE STAGE		.4	.4	.4	.8	.8
TWO STAGE	1ST	N/A	N/A	N/A	.4	.4
	2ND	N/A	N/A	N/A	.4	.4

When used with a heat pump, the heat output must be staged for models above 10 kW. W1 should be wired as auxiliary heat to assist the heat pump. W2 must only be wired as emergency heat. Both stages of heat should never be wired so as to be energized while the heat pump is operating. See the Blower Speed/Static Table for maximum allowable auxiliary first-stage heat. All EEC series electric heat assemblies over 10 kW have breakers factory-installed on the heat assembly.

Transformer Information

The low-voltage transformer is equipped with a 208- or 230-volt tap. The transformer is factory wired for 230-volt operation. For 208-volt operation, remove the yellow wire from the 230-volt terminal and install it onto the 208-volt terminal.

The acceptable voltage range for each tap is as follows:

Tap	Voltage Range
230	207 – 253
208	187 – 229

Time Delay Relay Information

A fan relay is provided to control the operation of the indoor fan motor. All models are equipped with a time delay "OFF"-type fan relay which will allow the fan motor to continue to operate for a preset time after the relay is de-energized.

CONDENSATE DRAIN PLUMBING

⚠ CAUTION ⚠

For downflow, or any installation where condensate overflow could create a hazard or water damage, the emergency drain fitting MUST be used. The emergency drain MUST be left open. If the emergency drain has to be piped away from the air handler, its outlet MUST be installed in a location that would allow any drainage to be immediately noticed.

Install condensate drain trap as close to the coil as possible. Use drain connection size or larger. Do not operate unit without trap (see illustration below.) Unit must be level or slightly inclined toward drain.

11 Condensate Drain Trap

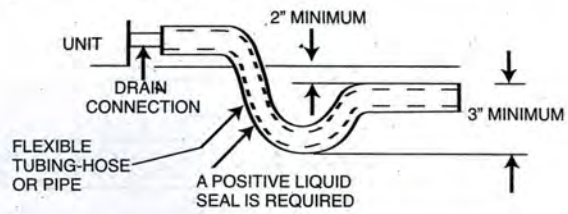

⚠ CAUTION ⚠

1. Do not connect the drain line to a closed sewer.
2. Never terminate an open sewer or drain connection within the return air duct, platform or return plenum.
3. Pitch the drain line at least 1/4" per foot away from the drain pan.
4. If condensate drain connection is on the negative side of the blower, a trap must be installed to ensure positive drainage.
5. Condensate drain lines should not be reduced in size from the connection size supplied.
6. The drain line should be insulated where necessary, to prevent sweating and damage due to condensate forming on the outside surface of the line.
7. Test condensate drain line with water before operating system.
8. If unit is located in or above a living space where damage may result from condensate overflow, a field supplied, external condensate pan should be installed under the entire unit, and a secondary condensate line (with appropriate trap) should be run from the unit into the pan. Any condensate in this external condensate pan should be drained to a noticeable place. As an alternative to using an external condensate pan, some localities may allow the running of a separate 3/4" condensate line (with appropriate trap) per local code to a place where the condensate will be noticeable.

12 Wiring Diagram

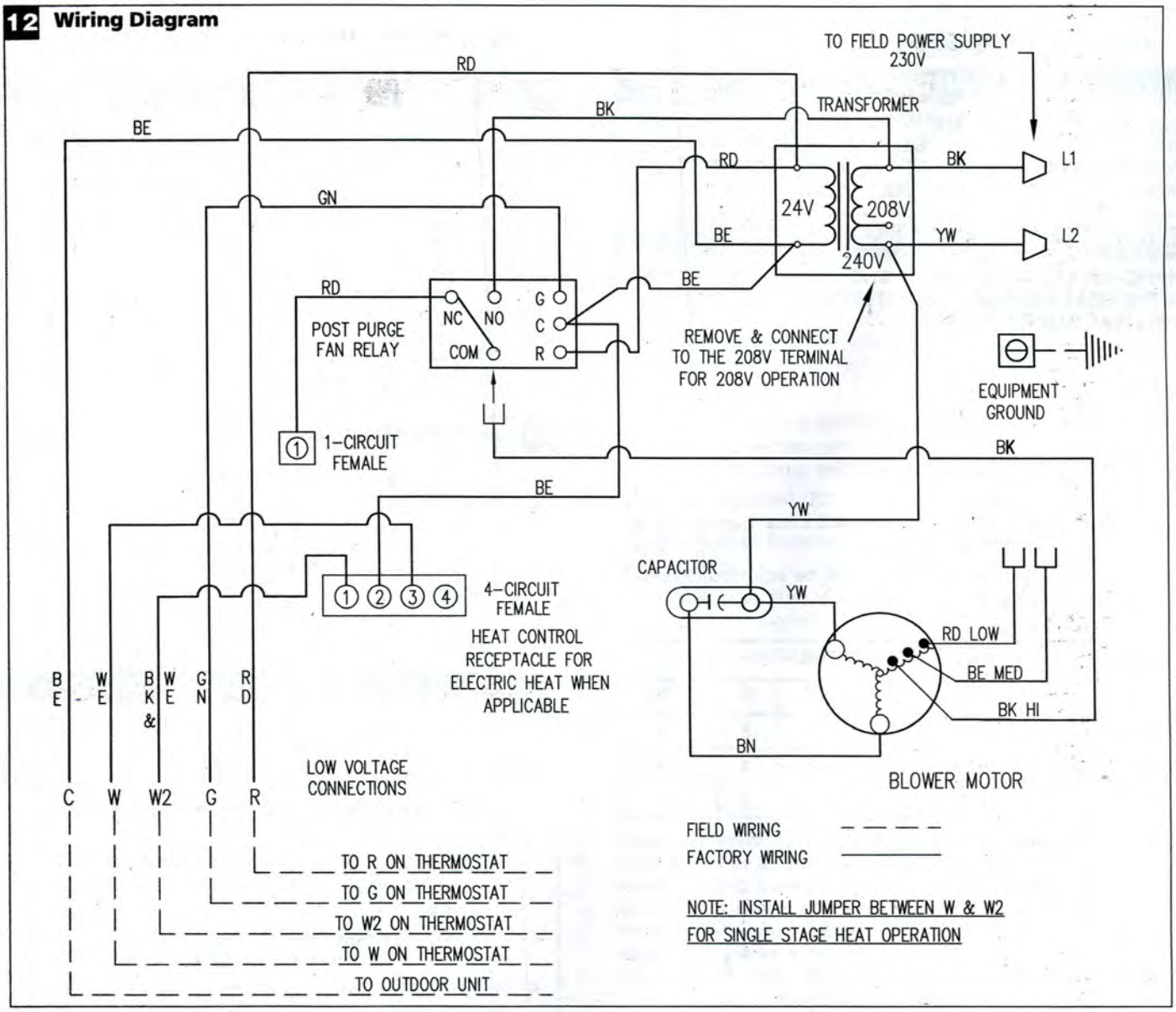

POWER SUPPLY TABLE

kW 230 VAC	Phase	No. of Supply Circuits	MBTUH 208/230	Heat Load Amps	SINGLE CIRCUIT SUPPLY Min. Wire ① Ampacity	Max. Fuse② Size	Wire Size ③ AWG	Wire Size ③ MM²	Ground Size ② AWG	Ground Size ② MM²	DUAL CIRCUIT SUPPLY Min. Wire Ampacity ① Ckt1	Ckt2	Ckt3	Max. Fuse Size ① Ckt1	Ckt2	Ckt3	Wire Size ③ Ckt1 AWG	Ckt1 MM²	Ckt2 AWG	Ckt2 MM²	Ckt3 AWG	Ckt3 MM²	Ground Size ③ Ckt1 AWG	Ckt1 MM²	Ckt2 AWG	Ckt2 MM²	Ckt3 AWG	Ckt3 MM²
0	1	1	-	-	5.0	15	14	2.1	14	2.1	–	–	–	–	–	–	–	–	–	–	–	–	–	–	–	–	–	–
5*	1	1	12.6 / 17.1	20.9	30	30	10	5.3	10	5.3	–	–	–	–	–	–	–	–	–	–	–	–	–	–	–	–	–	–
10*	1	1	25.6 / 34.1	41.7	57	60	6	13.3	10	5.3	–	–	–	–	–	–	–	–	–	–	–	–	–	–	–	–	–	–
15*	1	1 or 2	38.4 / 51.2	62.5	83	90	4	21.2	8	8.4	57	26	–	60	30	–	6	13.3	10	5.3	–	–	10	5.3	10	5.3	–	–
20*	1	1 or 2	51.2 / 68.2	83.4	109	110	2	33.6	6	13.3	57	53	–	60	60	–	6	13.3	6	13.3	–	–	10	5.3	10	5.3	–	–

*kW does not include motor watts.

① Ampacities and over current protection based on largest air handler motor load. Refer to specific name plate for exact ampacity and overcurrent protection size.

Minimum wire ampacity values are used for sizing field power conductors. Refer to the National Electrical Code (latest version), Article 310, for sizing conductors. When more than three current-carrying conductors are in the same conduit, the conductor's ampacity MUST be derated. See Note 8 of Table 310 for ampacity adjustment factors.

② Maximum size fuse or HACR-type circuit breaker for field wiring protection.

③ Wire size based on 75°C copper wire with no more than three current-carrying conductors in the same conduit. All wiring MUST conform to the National Electrical Code and all local codes.

13 Dimensions

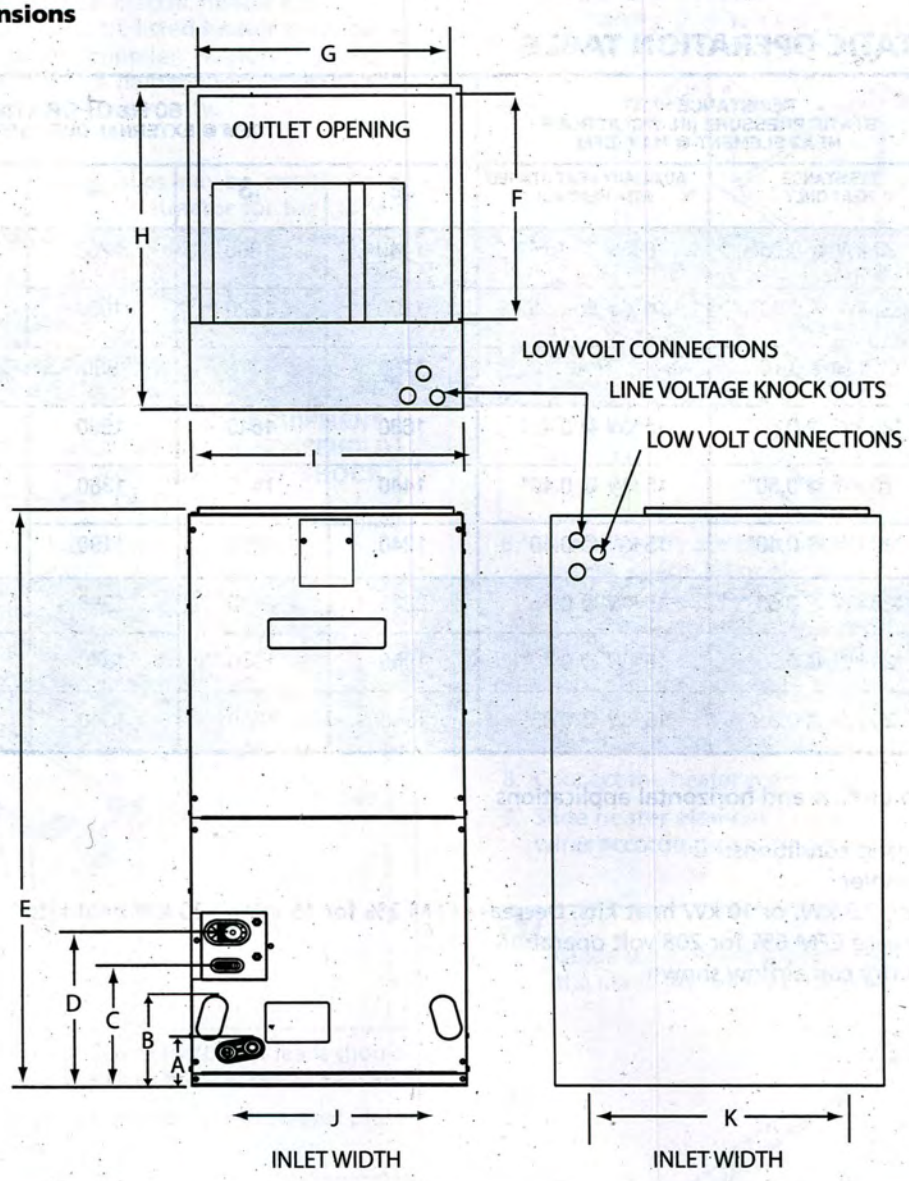

All dimensions in inches

Models	A	B	C	D	E	F	G	H	I	J	K
RB01-TFB36*	2 1/4	3 5/8	13 1/4	15 1/4	43 3/8	15	17	22	18	14	16 1/4
RB01-TFB48*	2 1/4	3 5/8	13 1/4	15	48 1/8	19 1/8	21	26	22	16 3/8	22 1/4
RB01-TFB60*	2 1/4	3 5/8	13 1/4	15	48 1/8	19 1/8	21	26	22	16 3/8	22 1/4

Motor Speed

Correct heating and cooling motor speeds MUST be used for proper operation. Refer to the Blower Speed/Static Operation Tabl below for correct cooling speed and for minimum allowable heating speed.

BLOWER SPEED / STATIC OPERATION TABLE

UNIT	MOTOR SPEED	RESISTANCE HEAT STATIC PRESSURE (IN. WC) ACROSS HEAT ELEMENT @ MAX. CFM		60 Hz OPERATION CFM @ EXTERNAL DUCT STATIC (IN. WC)				
		RESISTANCE HEAT ONLY	AUXILIARY HEAT STAGED WITH HEAT PUMP	.2	.3	.4	.5	.6
A*PB36A1	HIGH	20 kW @ 0.25"	10 kW @ 0.15"	1440	1350	1260	1180	1040
	MEDIUM	20 kW @ 0.20"	10 kW @ 0.15"	1300	1220	1050	940	860
	LOW	20 kW @ 0.15"	N/A	1160	1070	950	880	780
A*PC48A1 A*PC48B1	HIGH	*20 kW @ 0.60"	15 kW @ 0.45"	1680	1640	1590	1520	1430
	MEDIUM	*20 kW @ 0.50"	15 kW @ 0.40"	1440	1410	1380	1340	1250
	LOW	*20 kW @ 0.40"	15 kW @ 0.40"	1240	1220	1190	1150	1100
A*PC60A1 A*PC60B1	HIGH	*20 kW @ 0.60"	15 kW @ 0.45"	2230	2105	1990	1895	1725
	MEDIUM	*20 kW @ 0.50"	15 kW @ 0.40"	1950	1930	1840	1770	1590
	LOW	*20 kW @ 0.35"	15 kW @ 0.35"	1360	1350	1340	1185	1080

*Specifications applicable to upflow and horizontal applications

Air flow shown at the following conditions:

- No heat elements in air handler
- Decrease CFM 1% for 5 kW, 7.5 kW, or 10 kW heat kits. Decrease CFM 2% for 15 kW or 20 kW heat kits
- 50 Hertz — 220 volts. Decrease CFM 6% for 208 volt operation
- Standard air handler filter.Dry coil airflow shown

ELECTRIC HEATER KIT

This unit is not equipped with an electric heater kit. A factory approved, field installed UL listed heater package is available from your equipment supplier. Heaters that are not factory approved could cause damage which would not be covered under the equipment warranty.

Installation

Only EEC series electric heat assemblies may be installed into the air handler. Consult installing contractor for the correct electric heat assembly to be installed in each model of air handler.

For ease of installation, it is recommended that the electric heat kit be installed before the furnace plenum is installed.

⚠ WARNING ⚠

BEFORE PERFORMING ANY WORK ON THIS EQUIPMENT, POWER SUPPLY MUST BE TURNED OFF AT THE HOUSEHOLD SERVICE BOX TO AVOID THE POSSIBILITY OF SHOCK, INJURY, DAMAGE TO EQUIPMENT, OR DEATH.

1. Remove the upper access door from the air handler.
2. Remove and discard the field wiring compartment box by removing the screws that attach it to the right side of the air handler.

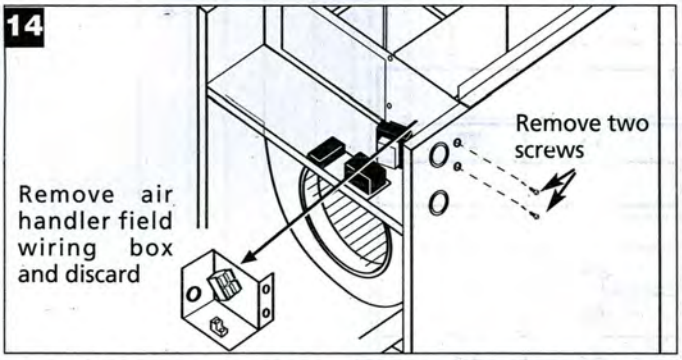

3. The black and yellow high voltage transformer leads should be connected to the terminal block or breaker of the heat kit.
4. From the electrical compartment, remove the cover plate from the element housing.

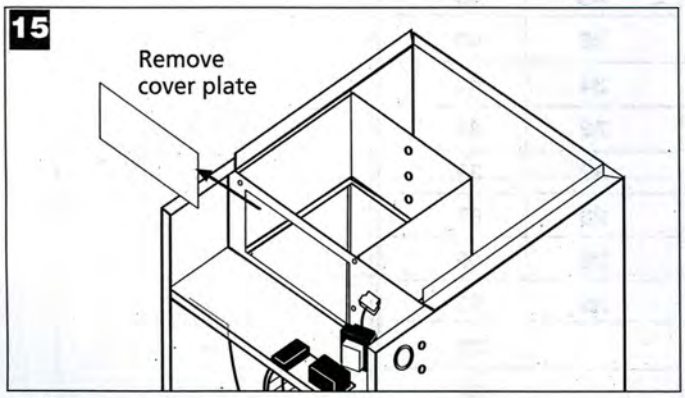

5. Cut the wire tie holding the heater plug and unroll the heater plug harness so that it will hang out of the electrical box.

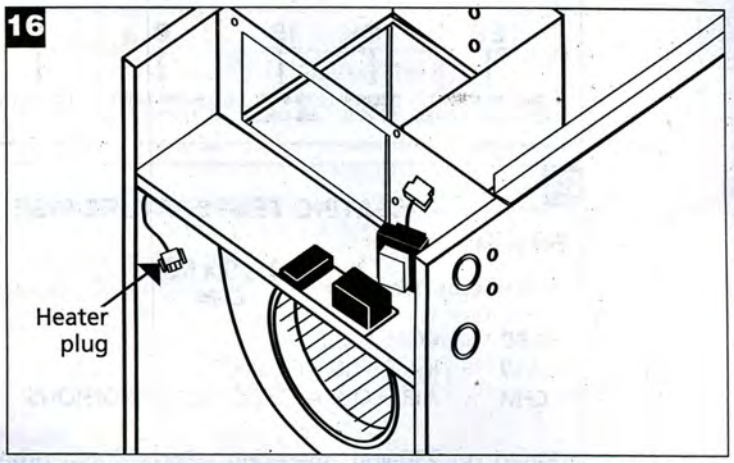

6. Carefully slide the heat assembly into the element opening. Be sure the heater kit or elements do not rub or scrape against the metal edges or existing components in the electrical box. Guide the element support rods into the matching holes in the blower boot.
7. Make sure the assembly is bottomed out against the element housing. Install the screws provided through the assembly and into the element housing.
8. Connect the heater plugs to the heater receptacles.
9. Slide heater element in and secure with three screws. Attach wires according to wiring diagram on page 9.

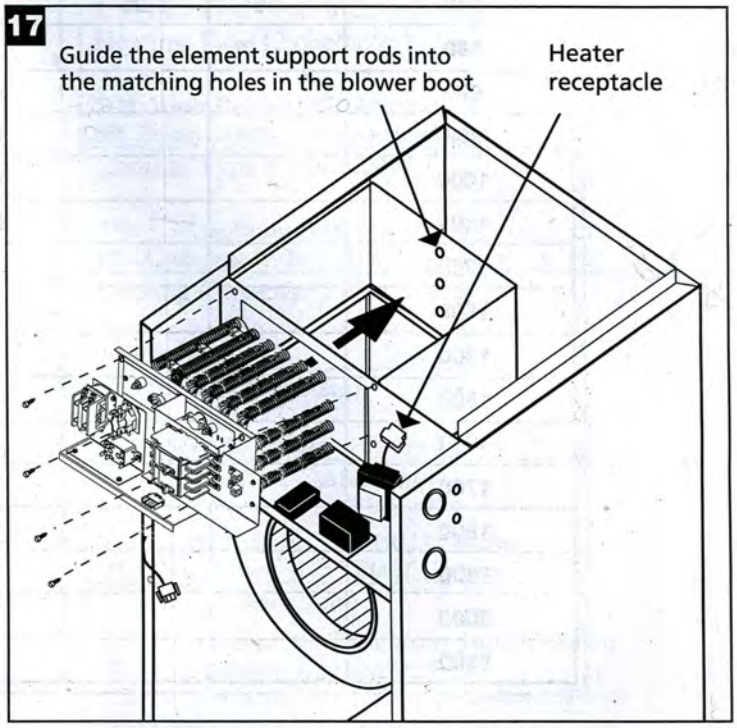

HEATING SPECIFICATIONS

19 ELECTRIC HEAT ASSEMBLY NOMENCLATURE

EE	C	15	B	1	*A
ELECTRIC HEAT ASSEMBLY SERIES	DESIGN SERIES	k-WAT 230 VOLTS	B=BREAKER N= NO BREAKER	1 = 1 PHASE	REVISION

21 HEATING TEMPERATURE RISE

Formula:

$$\text{Temp. Rise °F} = \frac{3160 \times kW}{CFM}$$

3160 = CONSTANT
kW = kW RATING OF UNIT
CFM = AIR FLOW AT SPECIFIED CONDITIONS

Based on 230-volt operation. For voltage other than 230, multiply temperature rise by capacity correction factor. Refer to CFM tables to determine Cfm at total external static pressure in system.

20 HEATING CORRECTION FACTOR

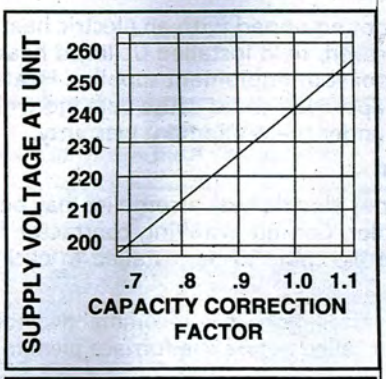

For correction of unit output, multiply the correction factor times the kW rating at 230 volts. For correction of temperature rise, multiply the correction factor times the rise calculated for the kW at 230 volts.

22 TEMPERATURE RISE °F

CFM	TOTAL kW				
	3	5	10	15	20
500	19	32			
600	16	26			
700				68	
800			40	59	
900			35	53	70
1000			32	47	63
1100			29	43	57
1200			26	40	53
1300				36	49
1400				34	45
1500				32	42
1600				30	39
1700				28	37
1800				26	35
1900				25	33
2000					32
2100					30

AIR HANDLING UNIT SERIES NOMENCLATURE

RB01 - TF B 60 CD HE 2 / S 14 N 12 N N W 1 B 01

01	Order No. (2 characters) **01, 02, …**
B	Product Serie (1 character) **A, B**
1	Power Supply (2 characters) **1**: Single phase, **3**: Three phases
W	Control Mode (1 character) **W**: Wire , **R**: Remote
N	Filter Type (1 character) **N**:Without filter **1**: Washable Before Fan , **2**: Low Speed Before Fan **3**: High Speed Before Fan **4**: Bag Before Fan **5**: Hepa After Fan **6**: Bag After Fan
N	Fresh Air Supply (1 character) **Y**: Yes , **N**: No
12	SEER (2 characters) **10,12,13,14,…**
N	Pipe Connection Side (1 character) **R**: Right, **L**: Left, **N**: Not Important
14	Electrical Heater Power (2 characters) (**Kw**) **NO**: Without Electrical Heater
S	Skin Type (1 character) **S**: Single , **D**: Double
1	Refrigerant (1 character) **1**: 134A , **2**: R22 , **3**: R407C , **4**: R410A
2	Heating Type (2 character) **WH**: Water Heating , **EH**: Electrical Heater, **SH** :Steam Heating , **NO**: No Heating
HE	Cooling Type (2 character) **CW**: Cooling Water , **DX**: Cooling DX , **CH**: Cooling & Heating , **NO**: No Cooling
CD	Cooling Capacity (2 characters) 1000Btu/h
60	Position (2 characters) **V**: Vertical , **H**: Horizontal , **B**: Both
B	Manufacturer (2 characters) **TF**: TRUST Fedders , **TM**: TRUST Midea **TG**: TRUST Gree ,**TC**: TRUST Chunlan , …
RB01	Product (4 characters) **RB01**: Residential Air Conditioning Systems, Blower Operating Systems, Air Handling Units **CB01**: Commercial Air Conditioning Systems, Blower Operating Systems, Air Handling Units

TRUST

Air Conditioning Systems

Cooling & Heating

TRUST AIR-CONDITIONING EQUIPMENT CO.
Shiraz office: 8 th floor, Alvand Blog., Dostan St.,
Moaliabad Ave., SHIRAZ, IRAN., Post code: 71877-14446
Tel.: +98-71-36341070
Fax.: +98-71-36341094
Tehran office: No. 19- koohe nour St.- Motahhari St.-
TEHRAN, IRAN., Post code: 15876-73111
Tel.: +98-21-89389
Fax.: +98-21-88541903
Ahwaz office: No. 309- Kaveh St.- AHWAZ, IRAN., Post code: 61939-47911
Tel.: +98-61-32230647-8 **E-mail: info@trustacs.com**
Fax.: +98-61-32230647 **Web site: http://www.trustacs.com**

برند برتر در اولین جشنواره بین‌المللی
برترین نام و نشان‌های تجاری ایران

ISO 9001 REGISTERED
DNV
MGMT. SYS.
RvA C 024
DNV Certification B.V., The Netherlands